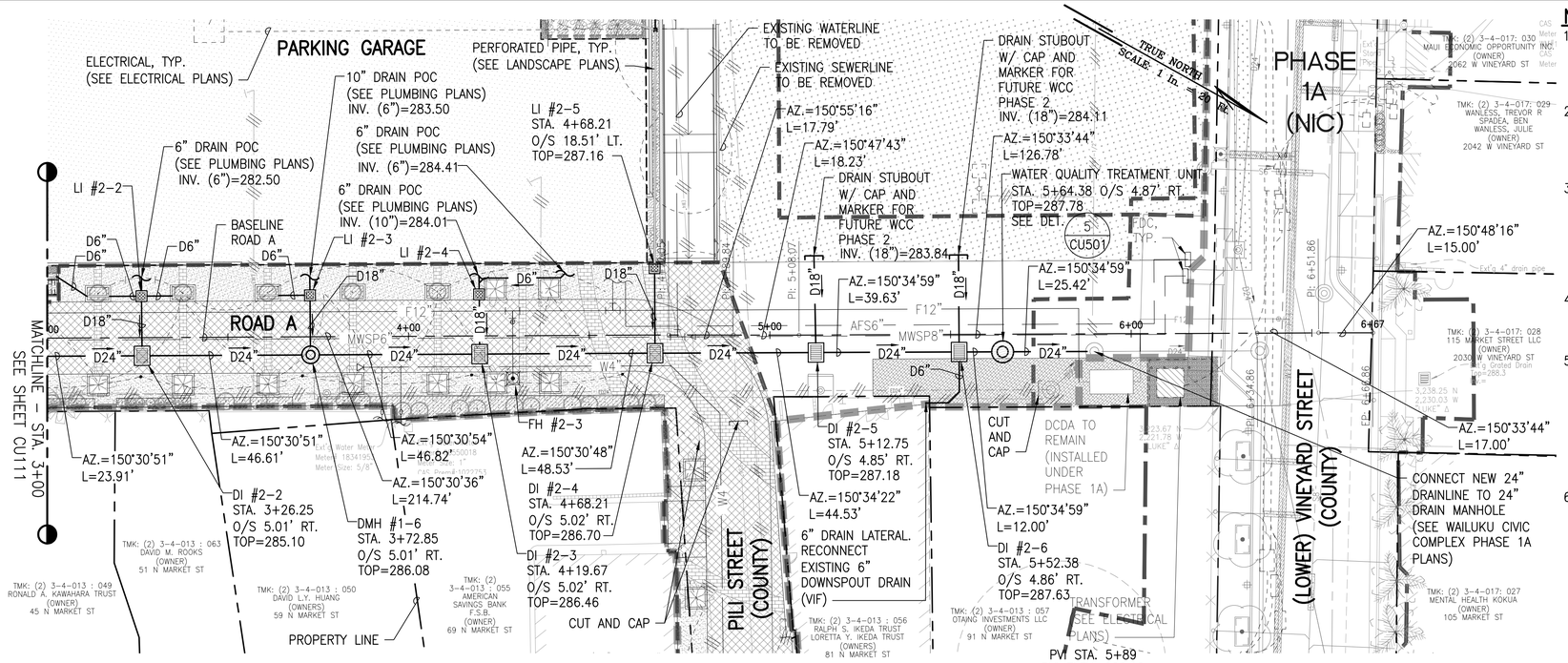


## PLAN

SCALE: 1" = 20'

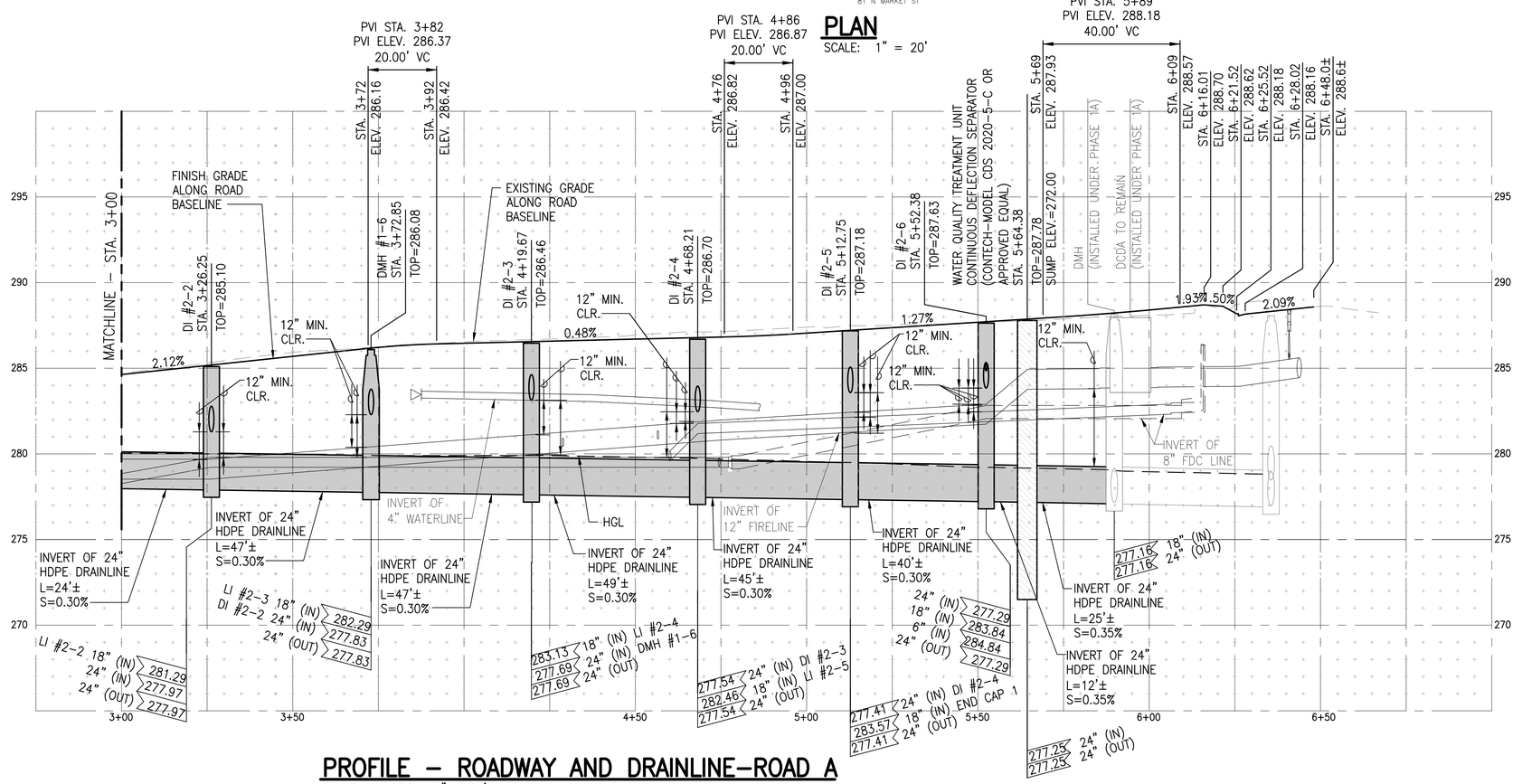


## PROFILE – ROADWAY AND DRAINLINE–ROAD A

SCALE: HORIZ 1" = 20'
VERT 1" = 4'

## NOTES:

1. CONTRACTOR SHALL PROVIDE AND INSTALL ALL REQUIRED FITTINGS, APPURTENANCES, AND MATERIALS, AS REQUIRED, TO PROVIDE A COMPLETE, FUNCTIONALE UTILITY SERVICE SYSTEM CONFORMING TO ALL CURRENT, APPLICABLE STANDARDS AND REQUIREMENTS.
2. CONTRACTOR SHALL INSTALL ALL FITTINGS, AS REQUIRED, TO EXTEND ALL SITE UTILITIES, INCLUDING LATERALS FROM MAINS, TO WITHIN 5 FT. (MAX.) OF BUILDING PERIMETER OR AS REFLECTED IN THE PLANS AND SHALL BEAR ALL COSTS THEREFROM. ALL LATERALS SHALL BE TERMINATED WITH PVC MARKER TO GRADE.
3. CONTRACTOR SHALL VERIFY ALL LOCATIONS OF REQUIRED CONNECTIONS AT BUILDINGS WITH THE MECHANICAL AND ARCHITECTURAL PLANS AND PROVIDE ALL REQUIRED FITTINGS (INCLUDING BUT NOT LIMITED TO REDUCERS, TEMPORARY PLUGS OR CAP, AND MARKERS) AND COORDINATION REQUIRED TO MAKE CONNECTION (BY OTHERS). FINAL CONNECTIONS AT BUILDINGS SHALL BE MADE BY THE BUILDING CONTRACTOR.
4. 4. DRAINLINES SHALL BE HDPE PIPE (SOIL TIGHT) PER SDOT SPECIFICATIONS. DOMESTIC WATER MAINS AND FIRELINES SHALL BE DUCTILE IRON, CLASS 52 WITH POLYWRAP.
5. 5. POINT OF CONNECTIONS OF PROPOSED UTILITIES FROM THE PROJECT SITE TO UTILITIES ALONG EXISTING CHURCH STREET AND VINEYARD STREET ARE BASED ON THE AVAILABLE DRAWINGS AND MAYBE INCOMPLETE OR ACTUAL LOCATION, SIZE AND DEPTH MAY VARY. CONTRACTOR SHALL CONDUCT FIELD INVESTIGATION TO CONFIRM EXACT LOCATION, DEPTH, SIZE AND TYPE OF UTILITIES PRIOR TO COMMENCEMENT OF WORK. SHOULD DISCREPANCIES OCCUR, CONTRACTOR SHALL IMMEDIATELY NOTIFY ENGINEER BEFORE PROCEEDING ANY FURTHER WITH THE WORK.
6. PROVIDE 12" MINIMUM VERTICAL CLEARANCE BETWEEN FIRELINE, WATERLINE AND DRAINLINE. SEE DWS TABLE 100–1.

## LEGEND:

- PROPERTY LINE
- BUILDING OUTLINE
- PHASE 1B BASE BID LIMITS
- PHASE 1A LATE TURNOVER ~~LIMITS~~
- ~~(PHASE 1A LATE TURNOVER LIMITS)~~
- PHASE 1A (NIC)
- ROAD CENTERLINE
- D24" — DRAINLINE
- S8" — SEWERLINE
- W12" — WATERLINE
- F12" — FIRELINE
- AFS6" — AUTOMATIC FIRE SPRINKLER
- MWSP6" — MANUAL WET STANDPIPE
- ELECTRICAL (SEE ELECTRICAL PLANS)
- FH — FIRE HYDRANT
- DMH — DRAIN MANHOLE (SEE DPW STD. DET. D–22)
- LI — 2' X 2' LANDSCAPE INLET (SEE DET. 3/CU501)
- DI — TYPE 61614P AND 1211214P GRATED DROP INLET (SEE HDOT STANDARD PLAN H–12)
- DI — TYPE 1A–9 AND 1A–9P GRATED DROP INLET (SEE HDOT STANDARD PLAN H–08)
- DI — 1' X 1' DRAIN INLET (SEE DET. 2/CU501)
- WATER QUALITY UNIT (SEE DET. 5/CU501)

## GRAPHIC SCALE:

4' 3' 2' 1' 0 4' 8' — SCALE: 1" = 4'

20' 10' 0 20' 40' — SCALE: 1" = 20'


FERRARO CHOI
FERRARO CHOI AND ASSOCIATES LTD
ARCHITECTURE / INTERIOR ARCHITECTURE / RESEARCH
733 BISHOP ST. SUITE 2620 HONOLULU HI 96813-4016
TEL 808 533 8880 FAX 808 599 3769 www.ferrarochoi.com


WENDY G. McLAIN LICENSED PROFESSIONAL ENGINEER NO. 11328-C HAWAII USA

SIGNATURE — EXPIRATION OF LICENSE 04/30/2020

THIS WORK WAS PREPARED BY ME OR UNDER MY SUPERVISION AND CONSTRUCTION OF THIS PROJECT WILL BE SUPERVISED BY ME OR UNDER MY SUPERVISION (DEPARTMENT OF COMMERCE AND CONSUMER AFFAIRS)

# WAILUKU CIVIC COMPLEX PHASE 1B

100% FINAL DESIGN

NOT FOR CONSTRUCTION

SHEET TITLE: PLAN AND PROFILE: ROADWAY AND DRAINLINE - ROAD A

REVISIONS:

PROJECT:

DRAWN:

DATE: 7/25/2019

PHASE 1B

SHEET CU112 OF SHEETS

CADD FILE:


COPYRIGHT PROTECTED: THIS WORK IS PROTECTED UNDER THE 1990 ARCHITECTURAL WORKS COPYRIGHT PROTECTION ACT

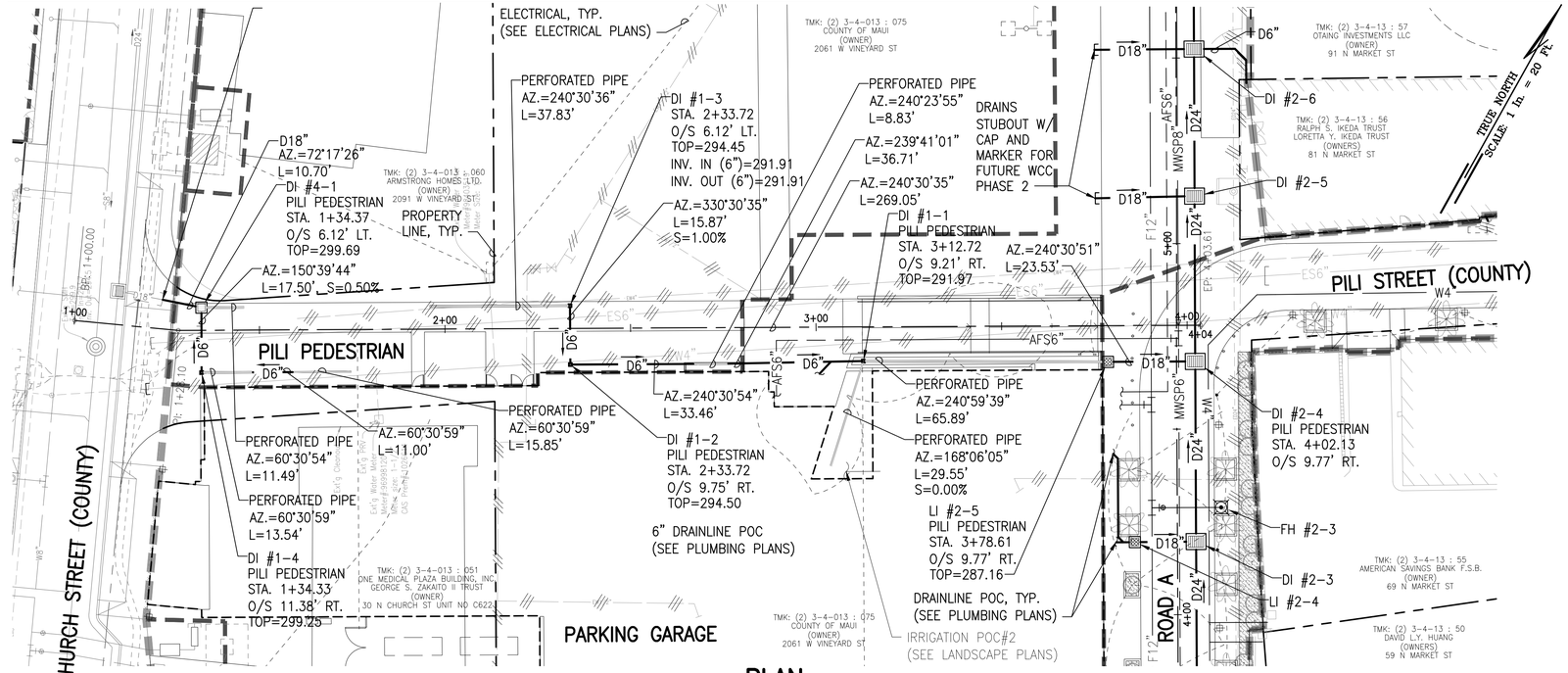


## PLAN

SCALE: 1" = 20'

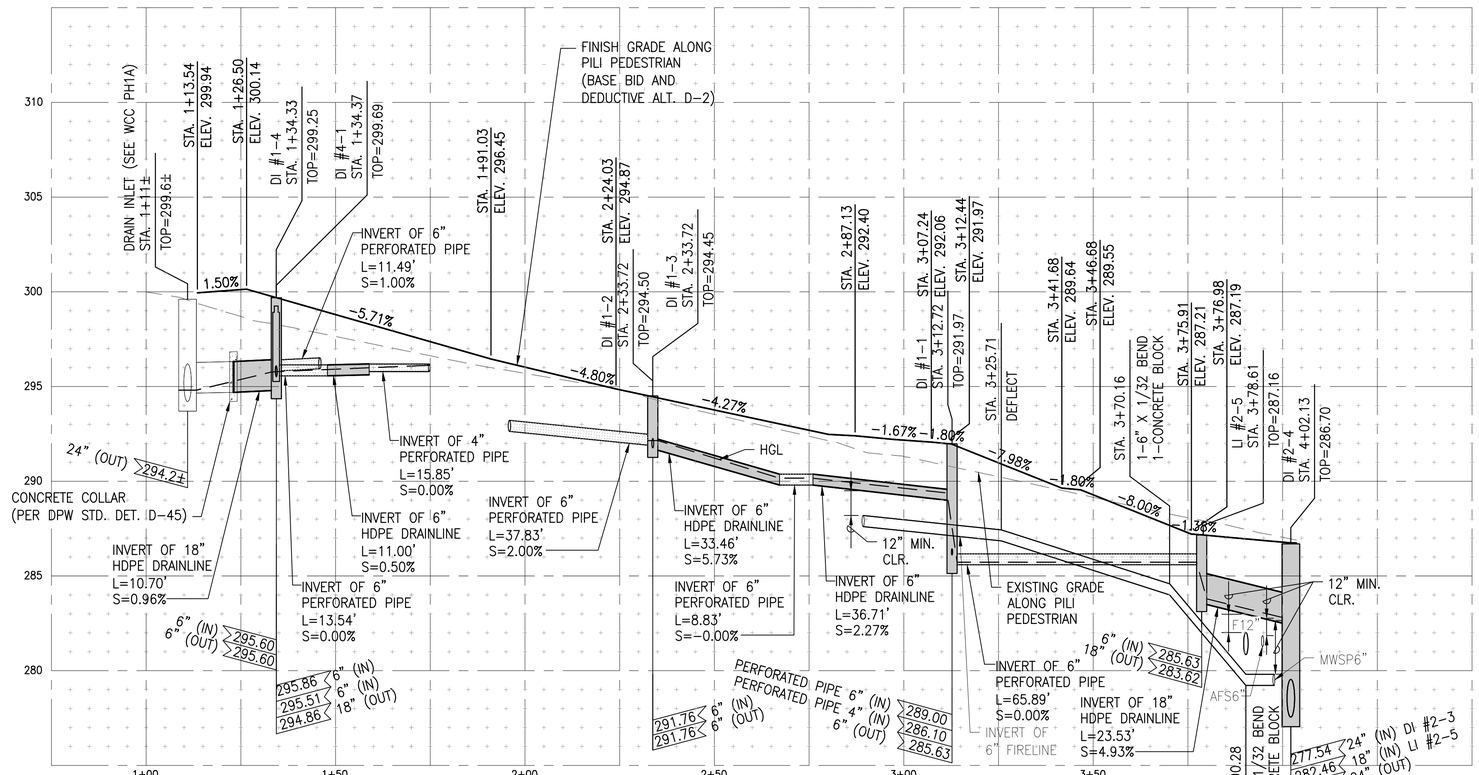


## PROFILE – ROADWAY AND DRAINLINE–PILI PEDESTRIAN

SCALE: HORIZ 1" = 20'
VERT 1" = 4'

## NOTES:

1. CONTRACTOR SHALL PROVIDE AND INSTALL ALL REQUIRED FITTINGS, APPURTENANCES, AND MATERIALS, AS REQUIRED, TO PROVIDE A COMPLETE, FUNCTIONABLE UTILITY SERVICE SYSTEM CONFORMING TO ALL CURRENT, APPLICABLE STANDARDS AND REQUIREMENTS.
2. CONTRACTOR SHALL INSTALL ALL FITTINGS, AS REQUIRED, TO EXTEND ALL SITE UTILITIES, INCLUDING LATERALS FROM MAINS, TO WITHIN 5 FT. (MAX.) OF BUILDING PERIMETER OR AS REFLECTED IN THE PLANS AND SHALL BEAR ALL COSTS THEREFROM. ALL LATERALS SHALL BE TERMINATED WITH PVC MARKER TO GRADE.
3. CONTRACTOR SHALL VERIFY ALL LOCATIONS OF REQUIRED CONNECTIONS AT BUILDINGS WITH THE MECHANICAL AND ARCHITECTURAL PLANS AND PROVIDE ALL REQUIRED FITTINGS (INCLUDING BUT NOT LIMITED TO REDUCERS, TEMPORARY PLUGS OR CAP, AND MARKERS) AND COORDINATION REQUIRED TO MAKE CONNECTION (BY OTHERS). FINAL CONNECTIONS AT BUILDINGS SHALL BE MADE BY THE BUILDING CONTRACTOR.
4. DRAINLINES SHALL BE HDPE PIPE (SOIL TIGHT) PER SDOT SPECIFICATIONS. DOMESTIC WATER MAINS AND FIRELINES SHALL BE DUCTILE IRON, CLASS 52 WITH POLYWRAP.
5. POINT OF CONNECTIONS OF PROPOSED UTILITIES FROM THE PROJECT SITE TO UTILITIES ALONG EXISTING CHURCH STREET AND VINEYARD STREET ARE BASED ON THE AVAILABLE DRAWINGS AND MAYBE INCOMPLETE OR ACTUAL LOCATION, SIZE AND DEPTH MAY VARY. CONTRACTOR SHALL CONDUCT FIELD INVESTIGATION TO CONFIRM EXACT LOCATION, DEPTH, SIZE AND TYPE OF UTILITIES PRIOR TO COMMENCEMENT OF WORK. SHOULD DISCREPANCIES OCCUR, CONTRACTOR SHALL IMMEDIATELY NOTIFY ENGINEER BEFORE PROCEEDING ANY FURTHER WITH THE WORK.
6. PROVIDE 12" MINIMUM VERTICAL CLEARANCE BETWEEN FIRELINE, WATERLINE AND DRAINLINE. SEE DWS TABLE 100-1.

## LEGEND:

| | |
|---|---|
| | PROPERTY LINE |
| | BUILDING OUTLINE |
| | PHASE 1B BASE BID LIMITS |
| | PHASE 1A LATE TURNOVER |
| | ~~PHASE 1B DEDUCTIVE ALTERNATES (D-2 TO D-5) LIMITS~~ |
| | PHASE 1A (NIC) |
| | ROAD CENTERLINE |
| D24" | DRAINLINE |
| W12" | WATERLINE |
| F12" | FIRELINE |
| AFS6" | AUTOMATIC FIRE SPRINKLER |
| MWSP6" | MANUAL WET STANDPIPE |
| SMH | SEWER MANHOLE |
| FH | FIRE HYDRANT |
| DMH | DRAIN MANHOLE (SEE DPW STD. DET. D-22) |
| LI | 2' X 2' LANDSCAPE INLET (SEE DET. 3/CU501) |
| DI | 2' X 2' DRAIN INLET (SEE DET. 3/CU501) |
| DI | 1' X 1' DRAIN INLET (SEE DET. 2/CU501) |

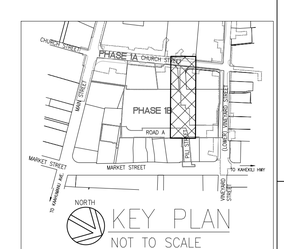


## GRAPHIC SCALE:

4' 3' 2' 1' 0 4' 8'
SCALE: 1" = 4'

20' 10' 0 20' 40'
SCALE: 1" = 20'


FERRARO CHOI
FERRARO CHOI AND ASSOCIATES LTD
ARCHITECTURE / INTERIOR ARCHITECTURE / RESEARCH
733 BISHOP ST. SUITE 2620 HONOLULU HI 96813-4016
TEL 808 533 8880 FAX 808 599 3769 www.ferrarochoi.com


WENDY G. McLAIN LICENSED PROFESSIONAL ENGINEER NO. 11328-C HAWAII USA
04/30/2020
SIGNATURE EXPIRATION OF LICENSE

THIS WORK WAS PREPARED BY ME OR UNDER MY SUPERVISION AND CONSTRUCTION OF THIS PROJECT WILL BE SUBMITTED TO THE BUILDING DEPARTMENT OF COMMERCE AND CONSUMER AFFAIRS

# WAILUKU CIVIC COMPLEX PHASE 1B

100% FINAL DESIGN

NOT FOR CONSTRUCTION

SHEET TITLE: PLAN AND PROFILE: ROADWAY AND DRAINLINE - PILI PEDESTRIAN

REVISIONS:

PROJECT:
DRAWN:
DATE: 7/25/2019
PHASE 1B
SHEET CU113
OF SHEETS
CADD FILE:


COPYRIGHT PROTECTED: THIS WORK IS PROTECTED UNDER THE 1990 ARCHITECTURAL WORKS COPYRIGHT PROTECTION ACT

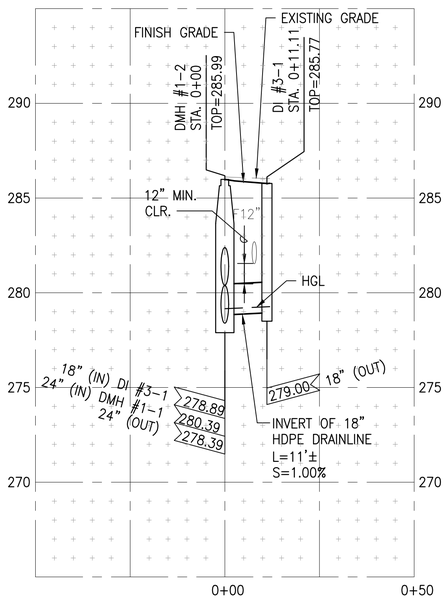


## PROFILE – D-1

SCALE: HORIZ 1" = 20'
VERT 1" = 4'

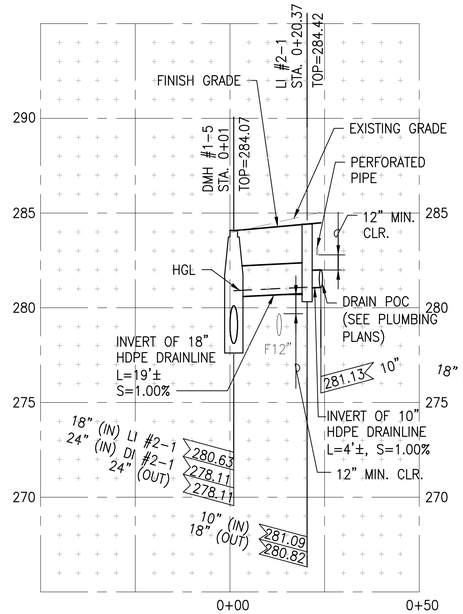


## PROFILE – D-2

SCALE: HORIZ 1" = 20'
VERT 1" = 4'

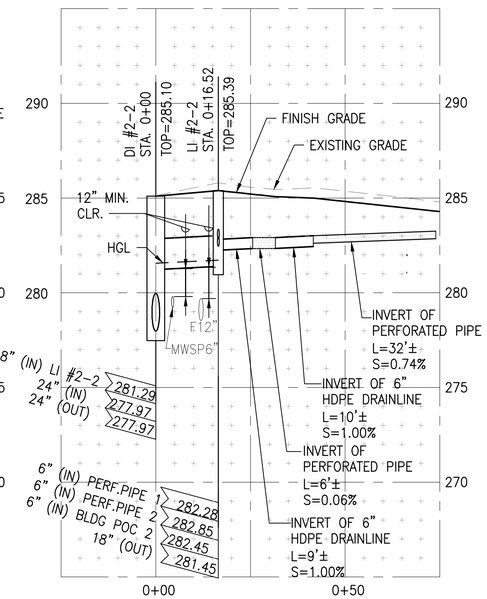


## PROFILE – D-3

SCALE: HORIZ 1" = 20'
VERT 1" = 4'

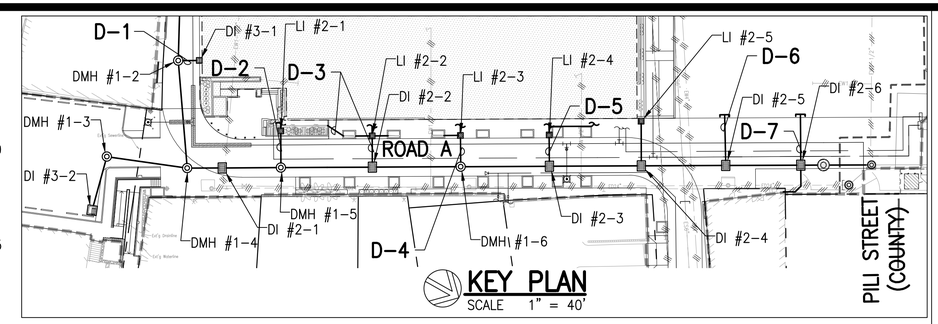


## KEY PLAN

SCALE 1" = 40'

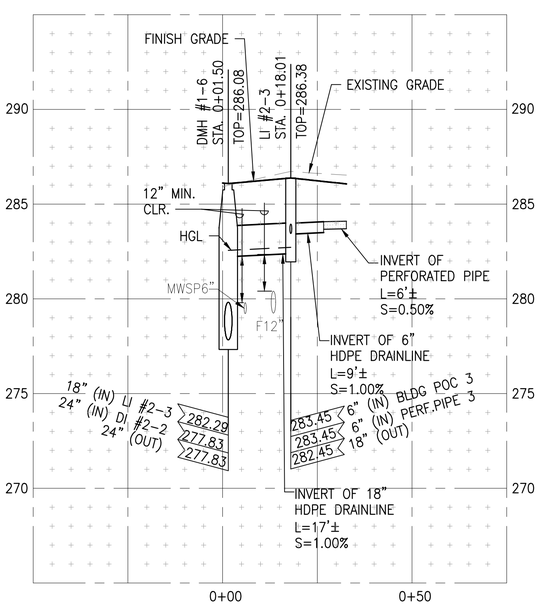


## PROFILE – D-4

SCALE: HORIZ 1" = 20'
VERT 1" = 4'

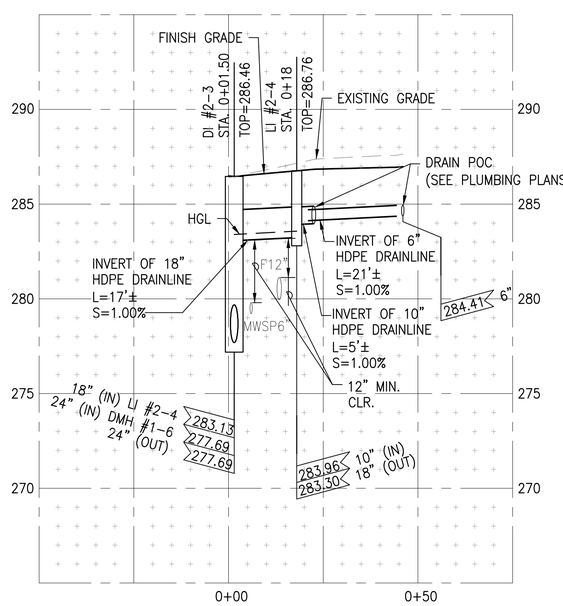


## PROFILE – D-5

SCALE: HORIZ 1" = 20'
VERT 1" = 4'

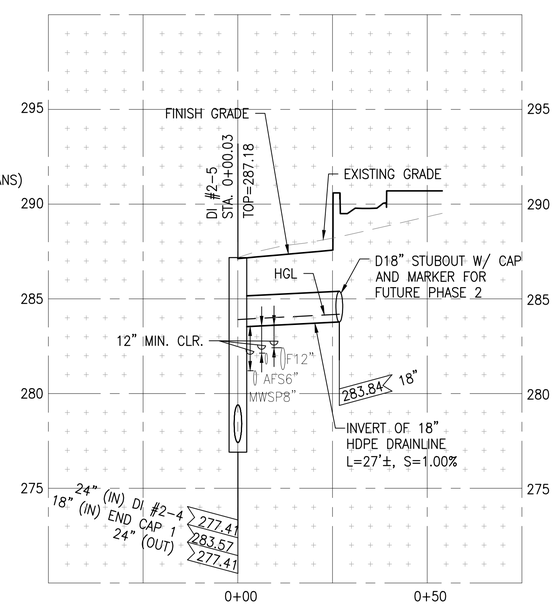


## PROFILE – D-6

SCALE: HORIZ 1" = 20'
VERT 1" = 4'

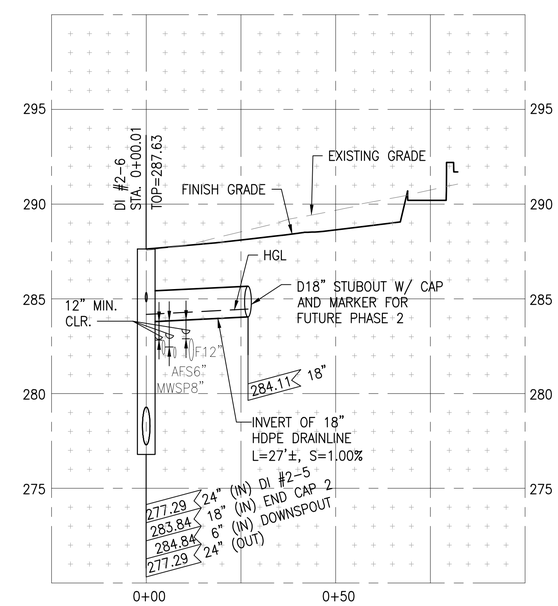


## PROFILE – D-7

SCALE: HORIZ 1" = 20'
VERT 1" = 4'

## GRAPHIC SCALE:

40' 20' 0 40' 80' — SCALE: 1" = 40'

4' 3' 2' 1' 0 4' 8' — SCALE: 1" = 4'

20' 10' 0 20' 40' — SCALE: 1" = 20'

FERRARO CHOI
FERRARO CHOI AND ASSOCIATES LTD
ARCHITECTURE / INTERIOR ARCHITECTURE / RESEARCH
733 BISHOP ST. SUITE 2620 HONOLULU HI 96813-4016
TEL 808 533 8880 FAX 808 599 3769 www.ferrarochoi.com

HENRY G McLAIN LICENSED PROFESSIONAL ENGINEER NO. 11328-C HAWAII USA

SIGNATURE — EXPIRATION OF LICENSE 04/30/2020

THIS WORK WAS PREPARED BY ME OR UNDER MY SUPERVISION AND CONSTRUCTION OF THIS PROJECT WILL BE UNDER MY PERSONAL SUPERVISION (PER DEPARTMENT OF COMMERCE AND CONSUMER AFFAIRS)

# WAILUKU CIVIC COMPLEX PHASE 1B

100% FINAL DESIGN

NOT FOR CONSTRUCTION

SHEET TITLE: DRAINLINE ROADWAY CROSSING PROFILE

REVISIONS:

CADD FILE:

PROJECT:

DRAWN:

DATE: 7/25/2019

PHASE 1B | SHEET CU114 | OF SHEETS

COPYRIGHT PROTECTED: THIS WORK IS PROTECTED UNDER THE 1990 ARCHITECTURAL WORKS COPYRIGHT PROTECTION ACT

W:_CIVIL 3D PROJECTS\2016_130.000 FCA WAILUKU TOWN PKG AND EVENT FACILITY\01 CIVIL DRAWINGS\PH-1B\43 CU114 DRAINLINE ROADWAY CROSSING.DWG 06/28/19 14:32 GGR

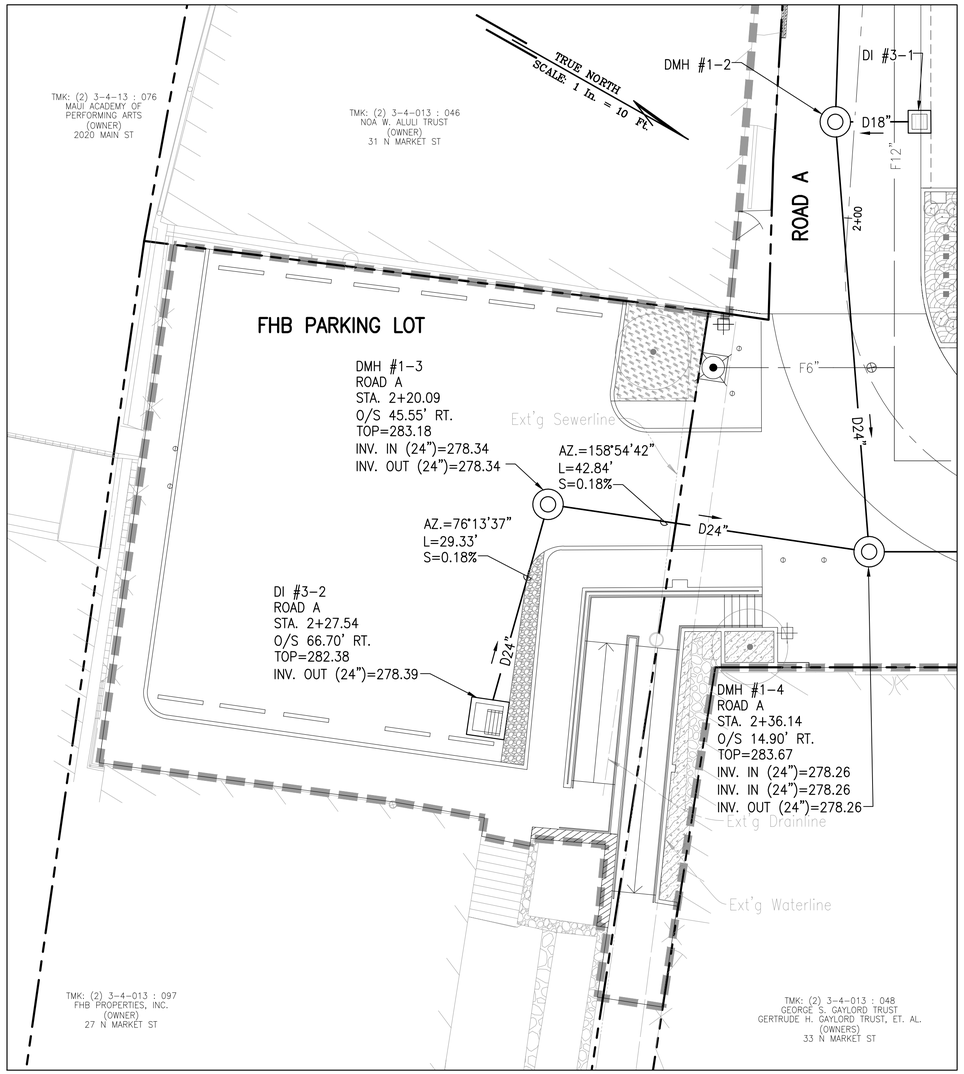


FHB PARKING LOT-BASE BID

SCALE: 1" = 10'

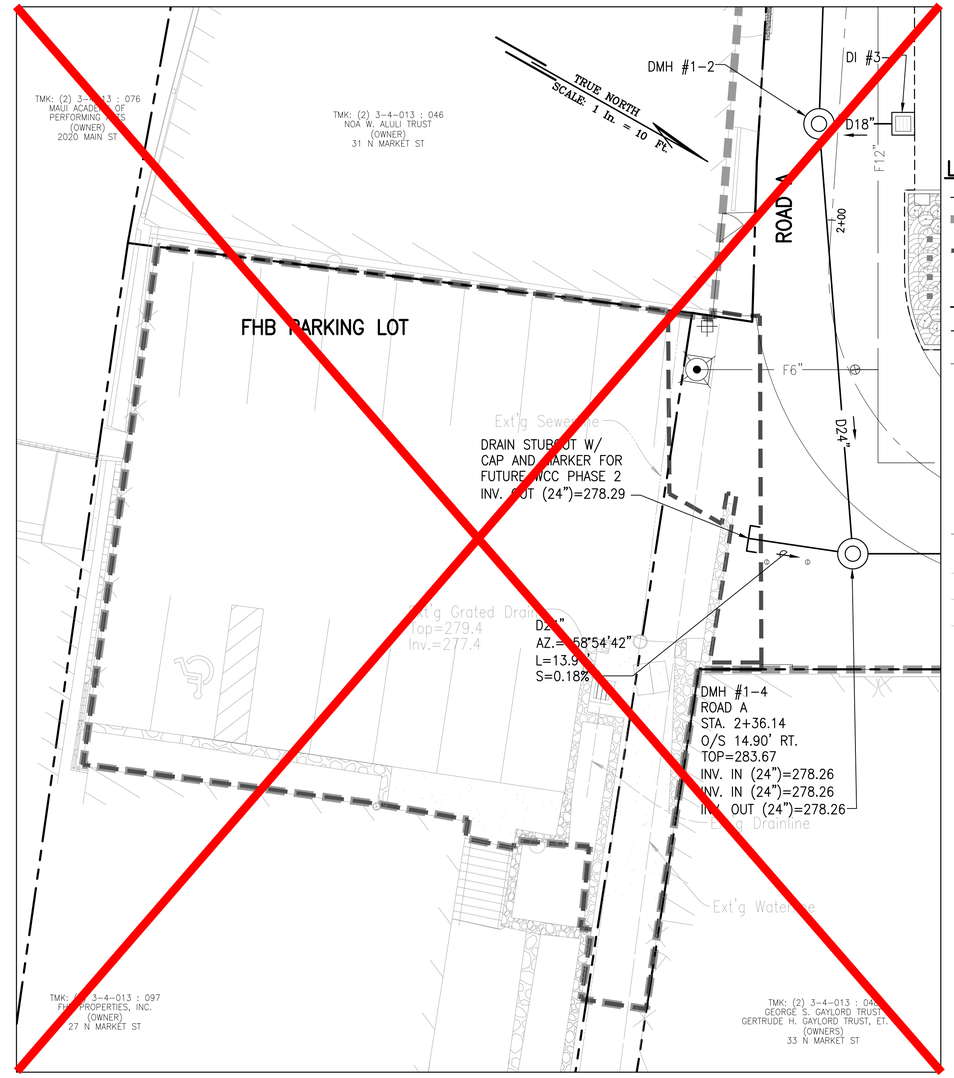


~~FHB PARKING LOT DEDUCTIVE ALTERNATE NO. D-1~~

SCALE: 1" = 10'

## LEGEND:

- PROPERTY LINE
- PHASE 1B BASE BID LIMITS
- PHASE 1A LATE TURNOVER ~~[illegible]~~ ~~[illegible]~~
- BUILDING OUTLINE
- D24" DRAINLINE
- F12" FIRELINE
- BUILDING DRAIN POC (SEE PLUMBING PLANS)
- DMH DRAIN MANHOLE (SEE DPW STD. DET. D-22)
- FH FIRE HYDRANT
- ELECTRICAL (SEE ELECTRICAL PLANS)
- ED24" EXISTING DRAINLINE
- ES8" EXISTING SEWERLINE
- EW12" EXISTING WATERLINE
- EXISTING LIGHT POLE
- DI TYPE 1A-9 AND 1A-9P GRATED DROP INLET (SEE HDOT STANDARD PLAN H-08)

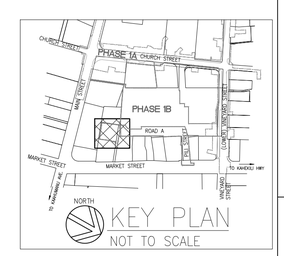


## GRAPHIC SCALE:

10' 5' 0 10' 20'

SCALE: 1" = 10'

FERRARO CHOI
FERRARO CHOI AND ASSOCIATES LTD
ARCHITECTURE / INTERIOR ARCHITECTURE / RESEARCH
733 BISHOP ST. SUITE 2620 HONOLULU HI 96813-4016
TEL 808 533 8880 FAX 808 599 3769 www.ferrarochoi.com

KENDY G. McLAIN LICENSED PROFESSIONAL ENGINEER NO. 11328-C HAWAII USA

04/30/2020
EXPIRATION OF LICENSE

SIGNATURE

THIS WORK WAS PREPARED BY ME OR UNDER MY SUPERVISION AND CONSTRUCTION OF THIS PROJECT WILL BE SUBJECT TO INSPECTION BY THE DEPARTMENT OF COMMERCE AND CONSUMER AFFAIRS)

# WAILUKU CIVIC COMPLEX PHASE 1B

100% FINAL DESIGN

NOT FOR CONSTRUCTION

SHEET TITLE: DETAILED DRAINLINE FHB PARKING LOT BASE BID/ ~~[illegible]~~

REVISIONS:

CADD FILE:

PROJECT:

DRAWN:

DATE: 7/25/2019

PHASE 1B

SHEET CU115

OF SHEETS

COPYRIGHT PROTECTED: THIS WORK IS PROTECTED UNDER THE 1990 ARCHITECTURAL WORKS COPYRIGHT PROTECTION ACT

W:_CIVIL 3D PROJECTS\2016_130.000 FDA WAILUKU TOWN PKG AND EVENT FACILITY\01 CIVIL DRAWINGS\PH-1B\44 CU115 DETAILED DRAINLINE PLAN-4.DWG 06/28/19 15:59 GGR

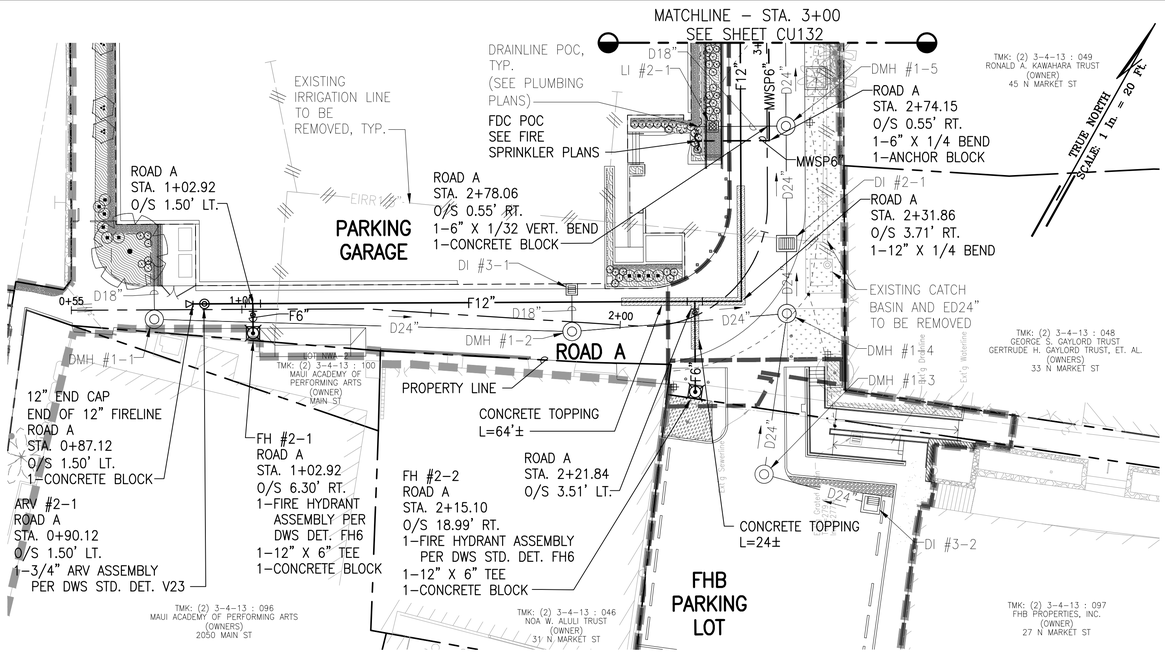


## PLAN

SCALE: 1" = 20'

## NOTES:

1. CONTRACTOR SHALL PROVIDE AND INSTALL ALL REQUIRED FITTINGS, APPURTENANCES, AND MATERIALS, AS REQUIRED, TO PROVIDE A COMPLETE, FUNCTIONABLE UTILITY SERVICE SYSTEM CONFORMING TO ALL CURRENT, APPLICABLE STANDARDS AND REQUIREMENTS.
2. CONTRACTOR SHALL INSTALL ALL FITTINGS, AS REQUIRED, TO EXTEND ALL SITE UTILITIES, INCLUDING LATERALS FROM MAINS, TO WITHIN 5 FT. (MAX.) OF BUILDING PERIMETER OR AS REFLECTED IN THE PLANS AND SHALL BEAR ALL COSTS THEREFROM. ALL LATERALS SHALL BE TERMINATED WITH PVC MARKER TO GRADE.
3. CONTRACTOR SHALL VERIFY ALL LOCATIONS OF REQUIRED CONNECTIONS AT BUILDINGS WITH THE MECHANICAL AND ARCHITECTURAL PLANS AND PROVIDE ALL REQUIRED FITTINGS (INCLUDING BUT NOT LIMITED TO REDUCERS, TEMPORARY PLUGS OR CAP, AND MARKERS) AND COORDINATION REQUIRED TO MAKE CONNECTION (BY OTHERS). FINAL CONNECTIONS AT BUILDINGS SHALL BE MADE BY THE BUILDING CONTRACTOR.
4. DRAINLINES SHALL BE HDPE PIPE (SOIL TIGHT) PER SDOT SPECIFICATIONS. DOMESTIC WATER MAINS AND FIRELINES SHALL BE DUCTILE IRON, CLASS 52 WITH POLYWRAP.
5. POINT OF CONNECTIONS OF PROPOSED UTILITIES FROM THE PROJECT SITE TO UTILITIES ALONG EXISTING CHURCH STREET AND VINEYARD STREET ARE BASED ON THE AVAILABLE DRAWINGS AND MAYBE INCOMPLETE OR ACTUAL LOCATION, SIZE AND DEPTH MAY VARY. CONTRACTOR SHALL CONDUCT FIELD INVESTIGATION TO CONFIRM EXACT LOCATION, DEPTH, SIZE AND TYPE OF UTILITIES PRIOR TO COMMENCEMENT OF WORK. SHOULD DISCREPANCIES OCCUR, CONTRACTOR SHALL IMMEDIATELY NOTIFY ENGINEER BEFORE PROCEEDING ANY FURTHER WITH THE WORK.
6. PROVIDE 12" MINIMUM VERTICAL CLEARANCE BETWEEN FIRELINE, WATERLINE AND DRAINLINE. SEE DWS TABLE 100-1.

## LEGEND:

- PROPERTY LINE
- BUILDING OUTLINE
- PHASE 1B BASE BID LIMITS
- PHASE 1A LATE TURNOVER AND ~~PROPOSED PERIMETER (0'-2.50' 5' MIN.) LIMITS~~
- ROAD CENTERLINE
- D24" DRAINLINE
- S8" SEWERLINE
- W12" WATERLINE
- F12" FIRELINE
- MWSP6" MANUAL WET STANDPIPE
- ELECTRICAL (SEE ELECTRICAL PLANS)
- FH FIRE HYDRANT (SEE DWS STD. DET. FH6)
- EXISTING FIRE HYDRANT
- DMH DRAIN MANHOLE
- DI DRAIN INLET
- LI LANDSCAPE INLET

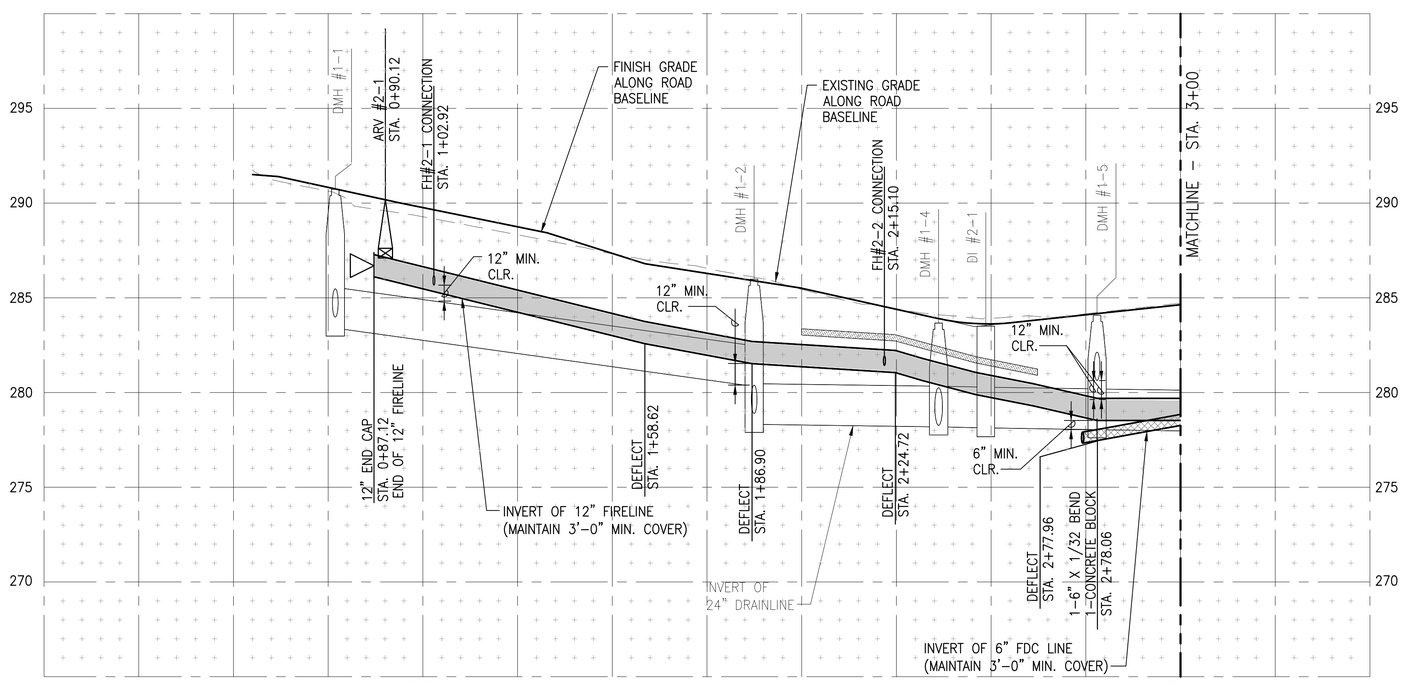


## PROFILE –WATERLINE AND FIRELINE–ROAD A

SCALE: HORIZ 1" = 20'
VERT 1" = 4'

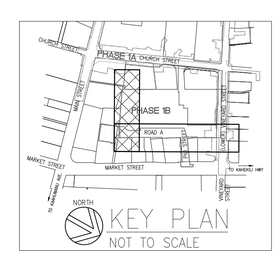


## GRAPHIC SCALE:

4' 3' 2' 1' 0 4' 8'
SCALE: 1" = 4'

20' 10' 0 20' 40'
SCALE: 1" = 20'

FERRARO CHOI

FERRARO CHOI AND ASSOCIATES LTD
ARCHITECTURE / INTERIOR ARCHITECTURE / RESEARCH
733 BISHOP ST. SUITE 2620 HONOLULU HI 96813-4016
TEL 808 533 8880 FAX 808 599 3769 www.ferrarochoi.com

MENDY G. McLAIN LICENSED PROFESSIONAL ENGINEER NO. 11328-C HAWAII USA

SIGNATURE | EXPIRATION OF LICENSE 04/30/2020

THIS WORK WAS PREPARED BY ME OR UNDER MY SUPERVISION AND CONSTRUCTION OF THIS PROJECT WILL BE SUBJECT TO INSPECTION BY THE DEPARTMENT OF COMMERCE AND CONSUMER AFFAIRS

# WAILUKU CIVIC COMPLEX PHASE 1B

100% FINAL DESIGN

NOT FOR CONSTRUCTION

SHEET TITLE: PLAN AND PROFILE: WATERLINE AND FIRELINE - ROAD A

REVISIONS:

CADD FILE:

PROJECT:

DRAWN:

DATE: 7/25/2019

PHASE 1B | SHEET CU131 | OF SHEETS

COPYRIGHT PROTECTED: THIS WORK IS PROTECTED UNDER THE 1990 ARCHITECTURAL WORKS COPYRIGHT PROTECTION ACT

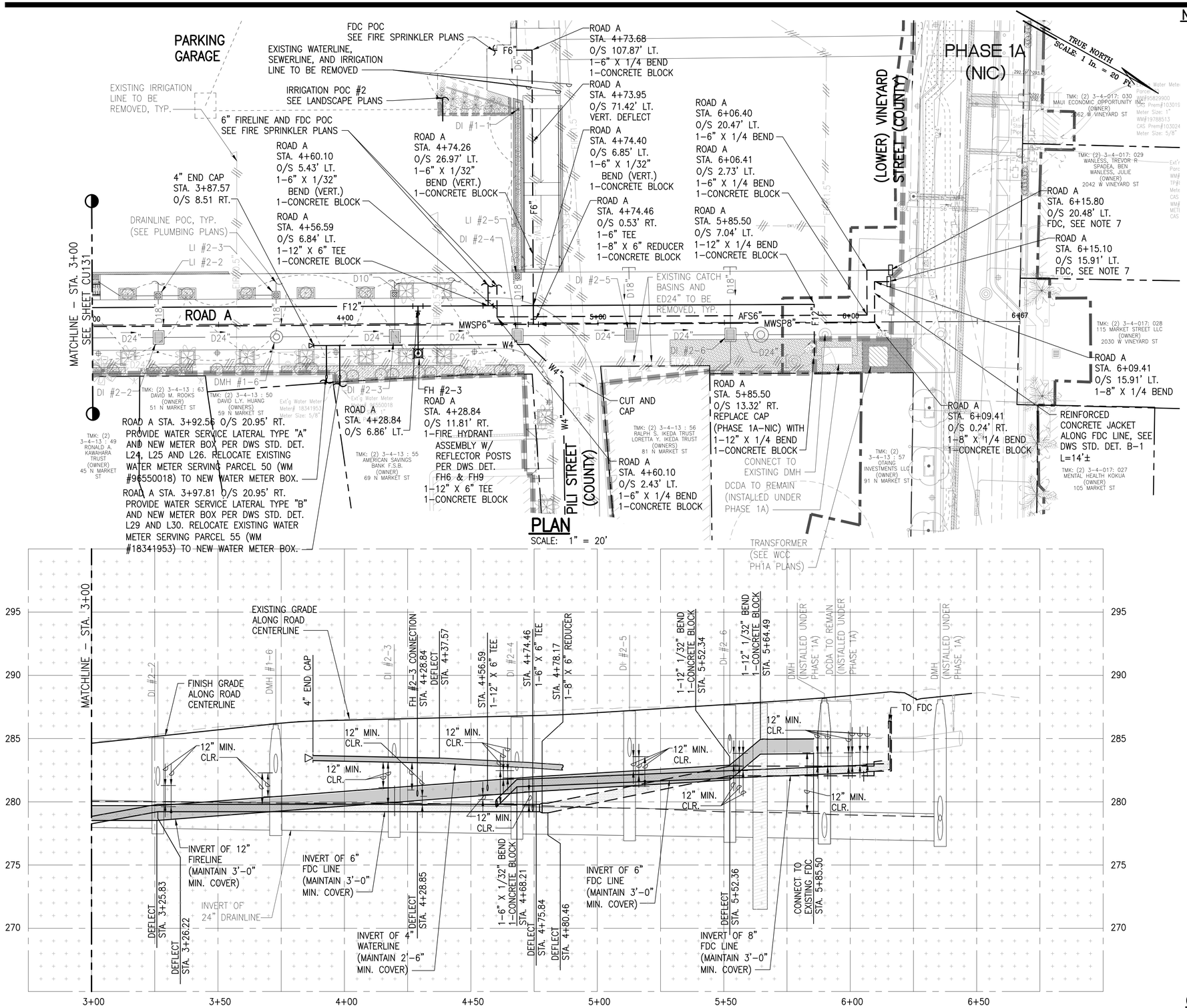


## PROFILE -WATERLINE AND FIRELINE-ROAD A

SCALE: HORIZ 1" = 20'
VERT 1" = 4'

## NOTES:

1. CONTRACTOR SHALL PROVIDE AND INSTALL ALL REQUIRED FITTINGS, APPURTENANCES, AND MATERIALS, AS REQUIRED, TO PROVIDE A COMPLETE, FUNCTIONABLE UTILITY SERVICE SYSTEM CONFORMING TO ALL CURRENT, APPLICABLE STANDARDS AND REQUIREMENTS.
2. CONTRACTOR SHALL INSTALL ALL FITTINGS, AS REQUIRED, TO EXTEND ALL SITE UTILITIES, INCLUDING LATERALS FROM MAINS, TO WITHIN 5 FT. (MAX.) OF BUILDING PERIMETER OR AS REFLECTED IN THE PLANS AND SHALL BEAR ALL COSTS THEREFROM. ALL LATERALS SHALL BE TERMINATED WITH PVC MARKER TO GRADE.
3. CONTRACTOR SHALL VERIFY ALL LOCATIONS OF REQUIRED CONNECTIONS AT BUILDINGS WITH THE MECHANICAL AND ARCHITECTURAL PLANS AND PROVIDE ALL REQUIRED FITTINGS (INCLUDING BUT NOT LIMITED TO REDUCERS, TEMPORARY PLUGS OR CAP, AND MARKERS) AND COORDINATION REQUIRED TO MAKE CONNECTION (BY OTHERS). FINAL CONNECTIONS AT BUILDINGS SHALL BE MADE BY THE BUILDING CONTRACTOR.
4. DRAINLINES SHALL BE HDPE PIPE (SOIL TIGHT) PER SDOT SPECIFICATIONS. DOMESTIC WATER MAINS AND FIRELINES SHALL BE DUCTILE IRON, CLASS 52 WITH POLYWRAP.
5. POINT OF CONNECTIONS OF PROPOSED UTILITIES FROM THE PROJECT SITE TO UTILITIES ALONG EXISTING CHURCH STREET AND VINEYARD STREET ARE BASED ON THE AVAILABLE DRAWINGS AND MAYBE INCOMPLETE OR ACTUAL LOCATION, SIZE AND DEPTH MAY VARY. CONTRACTOR SHALL CONDUCT FIELD INVESTIGATION TO CONFIRM EXACT LOCATION, DEPTH, SIZE AND TYPE OF UTILITIES PRIOR TO COMMENCEMENT OF WORK. SHOULD DISCREPANCIES OCCUR, CONTRACTOR SHALL IMMEDIATELY NOTIFY ENGINEER BEFORE PROCEEDING ANY FURTHER WITH THE WORK.
6. PROVIDE 12" MINIMUM VERTICAL CLEARANCE BETWEEN FIRELINE, WATERLINE AND DRAINLINE. SEE DWS TABLE 100-1.
7. FOR FIRE DEPARTMENT CONNECTION DETAIL, SEE FIRE SPRINKLER PLANS.

## LEGEND:

- PROPERTY LINE
- PHASE 1B BASE BID LIMITS
- PHASE 1A LATE TURNOVER
- ~~PHASE 1A (NIC)~~
- ~~BUILDING OUTLINE~~
- ROAD CENTERLINE
- D24" — DRAINLINE
- S8" — SEWERLINE
- W12" — WATERLINE
- FDC12" — FIRELINE
- AFS6" — AUTOMATIC FIRE SPRINKLER
- MWSP8" — MANUAL WET STANDPIPE
- ELECTRICAL (SEE ELECTRICAL PLANS)
- COTG — CLEANOUT
- DMH — DRAIN MANHOLE
- FH — FIRE HYDRANT
- EXISTING FIRE HYDRANT
- LI — LANDSCAPE INLET
- DI — DRAIN INLET

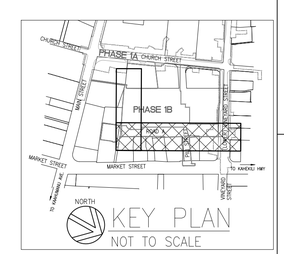


## GRAPHIC SCALE:

4' 3' 2' 1' 0 4' 8'
SCALE: 1" = 4'

20' 10' 0 20' 40'
SCALE: 1" = 20'


FERRARO CHOI
FERRARO CHOI AND ASSOCIATES LTD
ARCHITECTURE / INTERIOR ARCHITECTURE / RESEARCH
733 BISHOP ST. SUITE 2620 HONOLULU HI 96813-4016
TEL 808 533 8880 FAX 808 599 3769 www.ferrarochoi.com


WENDY G. McLAIN LICENSED PROFESSIONAL ENGINEER NO. 11328-C HAWAII USA
04/30/2020
SIGNATURE EXPIRATION OF LICENSE
THIS WORK WAS PREPARED BY ME OR UNDER MY SUPERVISION AND CONSTRUCTION OF THIS PROJECT WILL BE SUPERVISED BY ME (STATE DEPARTMENT OF COMMERCE AND CONSUMER AFFAIRS)

# WAILUKU CIVIC COMPLEX PHASE 1B

100% FINAL DESIGN

NOT FOR CONSTRUCTION

SHEET TITLE: PLAN AND PROFILE: WATERLINE AND FIRELINE - ROAD A

REVISIONS:

PROJECT:

DRAWN:

DATE: 7/25/2019

PHASE 1B

SHEET CU132

OF SHEETS

CADD FILE:


COPYRIGHT PROTECTED: THIS WORK IS PROTECTED UNDER THE 1990 ARCHITECTURAL WORKS COPYRIGHT PROTECTION ACT


W:_CIVIL 3D PROJECTS\2016_130.000 FCA WAILUKU TOWN PKG AND EVENT FACILITY\01 CIVIL DRAWINGS\PH-1B\46 CU132 PNP WATERLINE AND FIRELINE-ROAD A.DWG 06/28/19 19:03 SALD

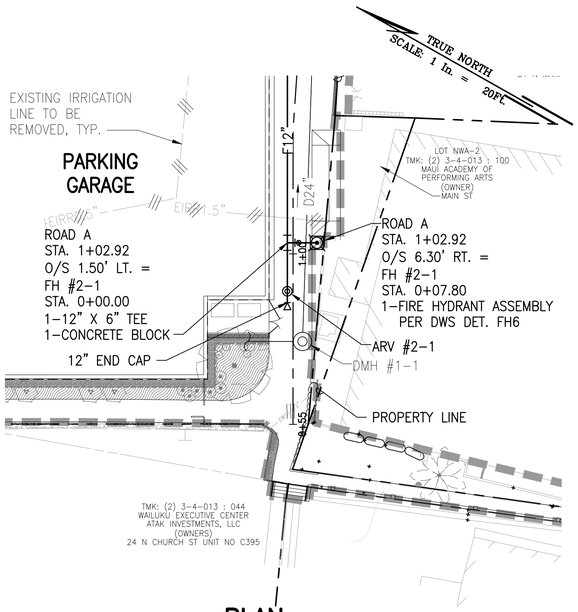


## PLAN
SCALE: 1" = 20'

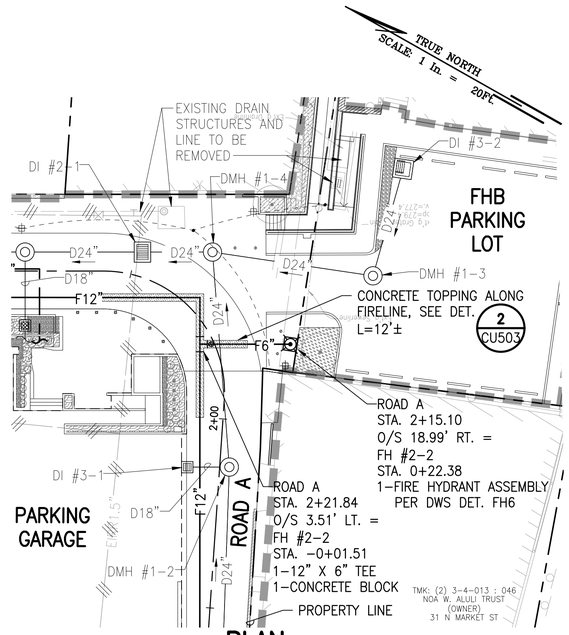


## PLAN
SCALE: 1" = 20'

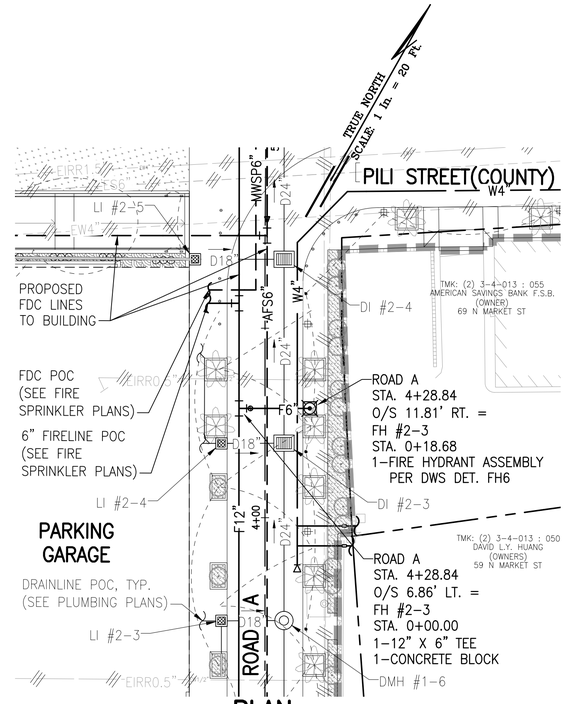


## PLAN
SCALE: 1" = 20'

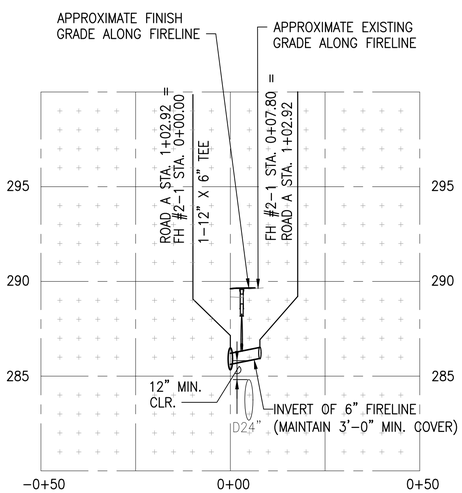


## PROFILE –FIRE HYDRANT CONNECTION 1
SCALE: HORIZ 1" = 20'
VERT 1" = 4'

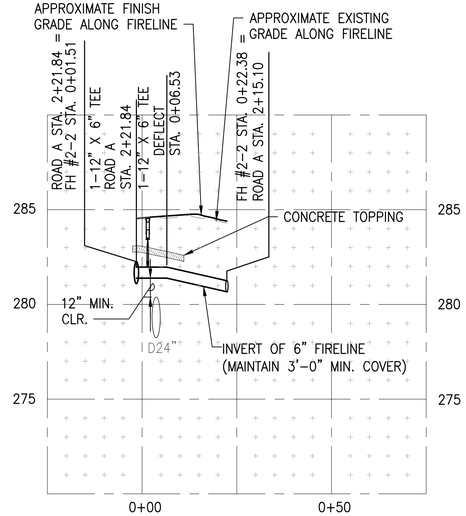


## PROFILE –FIRE HYDRANT CONNECTION 2
SCALE: HORIZ 1" = 20'
VERT 1" = 4'

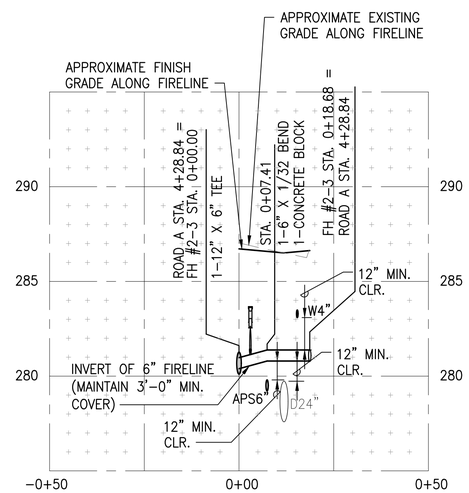


## PROFILE –FIRE HYDRANT CONNECTION 3
SCALE: HORIZ 1" = 20'
VERT 1" = 4'

## NOTES:

1. CONTRACTOR SHALL PROVIDE AND INSTALL ALL REQUIRED FITTINGS, APPURTENANCES, AND MATERIALS, AS REQUIRED, TO PROVIDE A COMPLETE, FUNCTIONABLE UTILITY SERVICE SYSTEM CONFORMING TO ALL CURRENT, APPLICABLE STANDARDS AND REQUIREMENTS.
2. CONTRACTOR SHALL INSTALL ALL FITTINGS, AS REQUIRED, TO EXTEND ALL SITE UTILITIES, INCLUDING LATERALS FROM MAINS, TO WITHIN 5 FT. (MAX.) OF BUILDING PERIMETER OR AS REFLECTED IN THE PLANS AND SHALL BEAR ALL COSTS THEREFROM. ALL LATERALS SHALL BE TERMINATED WITH PVC MARKER TO GRADE.
3. CONTRACTOR SHALL VERIFY ALL LOCATIONS OF REQUIRED CONNECTIONS AT BUILDINGS WITH THE MECHANICAL AND ARCHITECTURAL PLANS AND PROVIDE ALL REQUIRED FITTINGS (INCLUDING BUT NOT LIMITED TO REDUCERS, TEMPORARY PLUGS OR CAP, AND MARKERS) AND COORDINATION REQUIRED TO MAKE CONNECTION (BY OTHERS). FINAL CONNECTIONS AT BUILDINGS SHALL BE MADE BY THE BUILDING CONTRACTOR.
4. 4. DRAINLINES SHALL BE HDPE PIPE (SOIL TIGHT) PER SDOT SPECIFICATIONS. DOMESTIC WATER MAINS AND FIRELINES SHALL BE DUCTILE IRON, CLASS 52 WITH POLYWRAP.
5. 5. POINT OF CONNECTIONS OF PROPOSED UTILITIES FROM THE PROJECT SITE TO UTILITIES ALONG EXISTING CHURCH STREET AND VINEYARD STREET ARE BASED ON THE AVAILABLE DRAWINGS AND MAYBE INCOMPLETE OR ACTUAL LOCATION, SIZE AND DEPTH MAY VARY. CONTRACTOR SHALL CONDUCT FIELD INVESTIGATION TO CONFIRM EXACT LOCATION, DEPTH, SIZE AND TYPE OF UTILITIES PRIOR TO COMMENCEMENT OF WORK. SHOULD DISCREPANCIES OCCUR, CONTRACTOR SHALL IMMEDIATELY NOTIFY ENGINEER BEFORE PROCEEDING ANY FURTHER WITH THE WORK.
6. PROVIDE 12" MINIMUM VERTICAL CLEARANCE BETWEEN FIRELINE, WATERLINE AND DRAINLINE. SEE DWS TABLE 100-1.

## LEGEND:

- PROPERTY LINE
- PHASE 1B BASE BID LIMITS
- BUILDING OUTLINE
- ROAD CENTERLINE
- D24" DRAINLINE
- S8" SEWERLINE
- W12" WATERLINE
- F12" FIRELINE
- MWSP6" MANUAL WET STANDPIPE
- AFS6" AUTOMATIC FIRE SPRINKLER
- ELECTRICAL (SEE ELECTRICAL PLANS)
- DMH DRAIN MANHOLE
- FH FIRE HYDRANT (SEE DWS STD. DET. FH6)
- EXISTING FIRE HYDRANT
- LI LANDSCAPE INLET
- DI DI DI DI DRAIN INLET

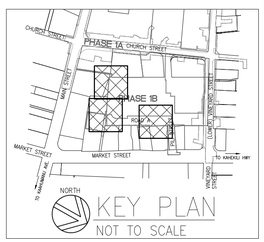


## GRAPHIC SCALE:

4' 3' 2' 1' 0 4' 8'
SCALE: 1" = 4'

20' 10' 0 20' 40'
SCALE: 1" = 20'


FERRARO CHOI
FERRARO CHOI AND ASSOCIATES LTD
ARCHITECTURE / INTERIOR ARCHITECTURE / RESEARCH
733 BISHOP ST. SUITE 2620 HONOLULU HI 96813-4016
TEL 808 533 8880 FAX 808 599 3769 www.ferrarochoi.com


HENRY G. McLAIN LICENSED PROFESSIONAL ENGINEER NO. 11328-C HAWAII USA
EXPIRATION OF LICENSE 04/30/2020
SIGNATURE
THIS WORK WAS PREPARED BY ME OR UNDER MY SUPERVISION AND CONSTRUCTION OF THIS PROJECT WILL BE SUPERVISED BY ME OR UNDER MY SUPERVISION (DEPARTMENT OF COMMERCE AND CONSUMER AFFAIRS)

# WAILUKU CIVIC COMPLEX PHASE 1B

100% FINAL DESIGN

NOT FOR CONSTRUCTION

SHEET TITLE: PLAN AND PROFILE: FIRE HYDRANT CONNECTION

REVISIONS:

CADD FILE:

PROJECT:

DRAWN:

DATE: 7/25/2019

PHASE 1B

SHEET CU133

OF SHEETS


COPYRIGHT PROTECTED: THIS WORK IS PROTECTED UNDER THE 1990 ARCHITECTURAL WORKS COPYRIGHT PROTECTION ACT


W:_CIVIL 3D PROJECTS\2016_130.000 FCA WAILUKU TOWN PKG AND EVENT FACILITY\01 CIVIL DRAWINGS\PH-1B\47 CU133 PNP FIRELINE-FH LATERAL.DWG 06/28/19 13:09 RGU

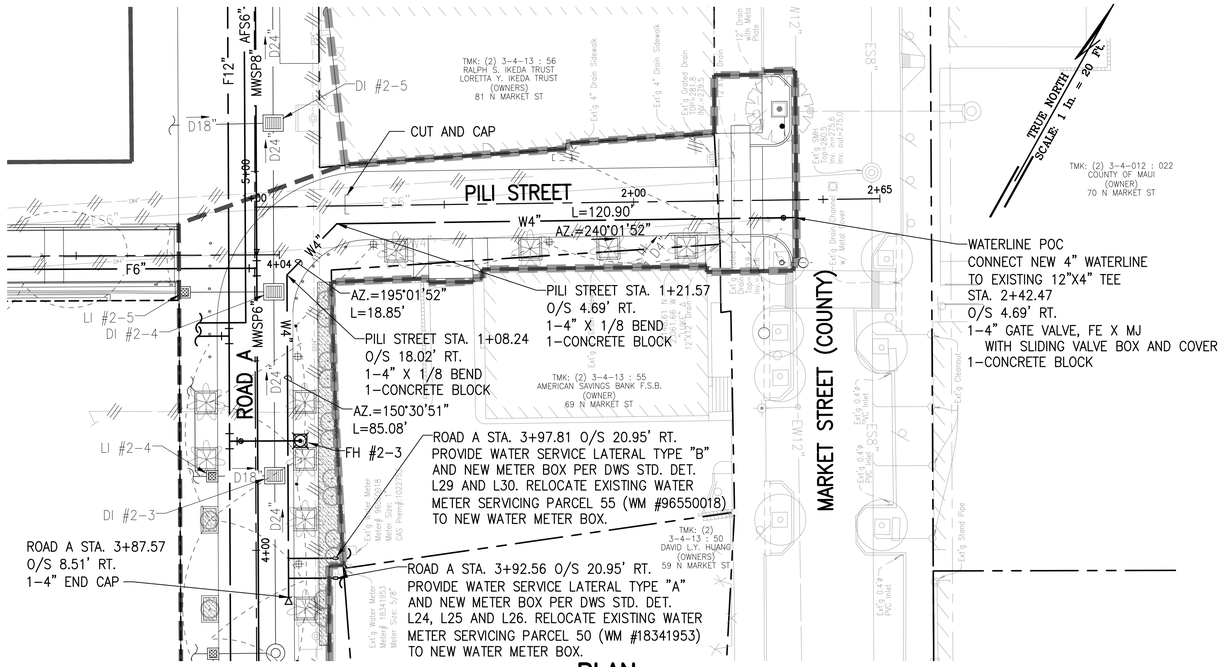


## PLAN

SCALE: 1" = 20'

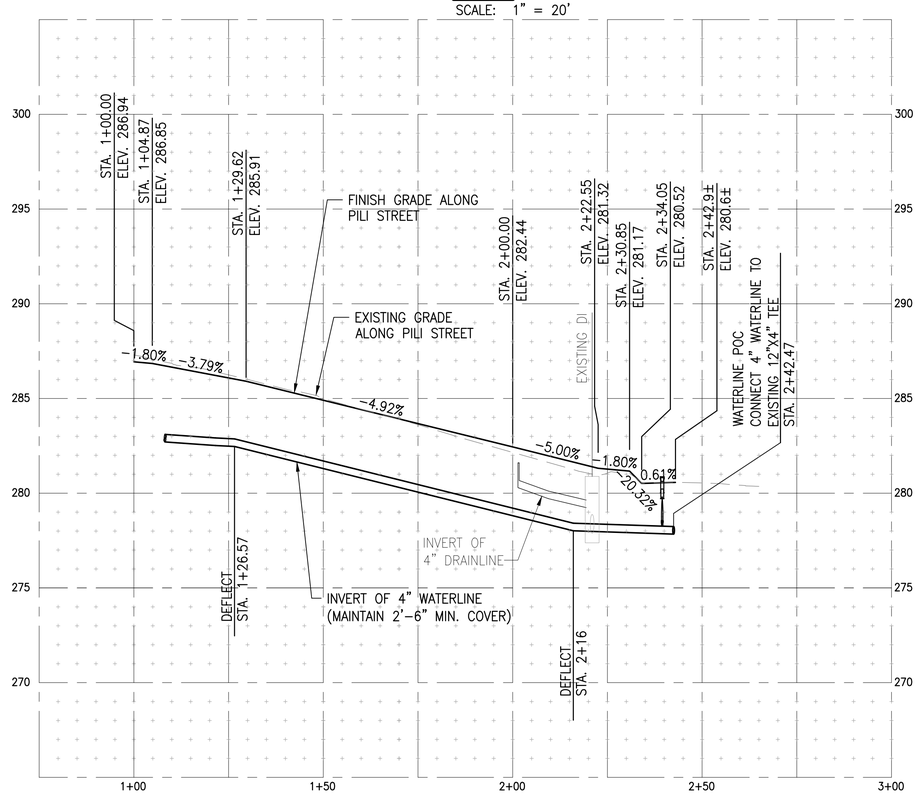


## PROFILE – ROADWAY AND WATERLINE–PILI STREET

SCALE: HORIZ 1" = 20'
VERT 1" = 4'

## NOTES:

1. CONTRACTOR SHALL PROVIDE AND INSTALL ALL REQUIRED FITTINGS, APPURTENANCES, AND MATERIALS, AS REQUIRED, TO PROVIDE A COMPLETE, FUNCTIONABLE UTILITY SERVICE SYSTEM CONFORMING TO ALL CURRENT, APPLICABLE STANDARDS AND REQUIREMENTS.
2. CONTRACTOR SHALL INSTALL ALL FITTINGS, AS REQUIRED, TO EXTEND ALL SITE UTILITIES, INCLUDING LATERALS FROM MAINS, TO WITHIN 5 FT. (MAX.) OF BUILDING PERIMETER OR AS REFLECTED IN THE PLANS AND SHALL BEAR ALL COSTS THEREFROM. ALL LATERALS SHALL BE TERMINATED WITH PVC MARKER TO GRADE.
3. CONTRACTOR SHALL VERIFY ALL LOCATIONS OF REQUIRED CONNECTIONS AT BUILDINGS WITH THE MECHANICAL AND ARCHITECTURAL PLANS AND PROVIDE ALL REQUIRED FITTINGS (INCLUDING BUT NOT LIMITED TO REDUCERS, TEMPORARY PLUGS OR CAP, AND MARKERS) AND COORDINATION REQUIRED TO MAKE CONNECTION (BY OTHERS). FINAL CONNECTIONS AT BUILDINGS SHALL BE MADE BY THE BUILDING CONTRACTOR.
4. DRAINLINES SHALL BE HDPE PIPE (SOIL TIGHT) PER SDOT SPECIFICATIONS. DOMESTIC WATER MAINS AND FIRELINES SHALL BE DUCTILE IRON, CLASS 52 WITH POLYWRAP.
5. POINT OF CONNECTIONS OF PROPOSED UTILITIES FROM THE PROJECT SITE TO UTILITIES ALONG EXISTING CHURCH STREET AND VINEYARD STREET ARE BASED ON THE AVAILABLE DRAWINGS AND MAYBE INCOMPLETE OR ACTUAL LOCATION, SIZE AND DEPTH MAY VARY. CONTRACTOR SHALL CONDUCT FIELD INVESTIGATION TO CONFIRM EXACT LOCATION, DEPTH, SIZE AND TYPE OF UTILITIES PRIOR TO COMMENCEMENT OF WORK. SHOULD DISCREPANCIES OCCUR, CONTRACTOR SHALL IMMEDIATELY NOTIFY ENGINEER BEFORE PROCEEDING ANY FURTHER WITH THE WORK.
6. PROVIDE 12" MINIMUM VERTICAL CLEARANCE BETWEEN FIRELINE, WATERLINE AND DRAINLINE. SEE DWS TABLE 100-1.

## LEGEND:

- PROPERTY LINE
- BUILDING OUTLINE
- PHASE 1B BASE BID LIMITS
- PHASE 1A LATE TURNOVER AND ~~REDUCTIVE ALTERNATES (B-2 TO B-4) LIMITS~~
- ROAD CENTERLINE
- D24" DRAINLINE
- S8" SEWERLINE
- W12" WATERLINE
- F12" FIRELINE
- MWSP6" MANUAL WET STANDPIPE
- AFS6" AUTOMATIC FIRE SPRINKLER
- ELECTRICAL (SEE ELECTRICAL PLANS)
- FH FIRE HYDRANT (SEE DWS STD. DET. FH6)
- EXISTING FIRE HYDRANT
- DMH DRAIN MANHOLE
- DI DRAIN INLET
- LI LANDSCAPE INLET

## GRAPHIC SCALE:

4' 3' 2' 1' 0 4' 8' — SCALE: 1" = 4'

20' 10' 0 20' 40' — SCALE: 1" = 20'

FERRARO CHOI

FERRARO CHOI AND ASSOCIATES LTD
ARCHITECTURE / INTERIOR ARCHITECTURE / RESEARCH
733 BISHOP ST. SUITE 2620 HONOLULU HI 96813-4016
TEL 808 533 8880 FAX 808 599 3769 www.ferrarochoi.com

WENDY G. McLAIN LICENSED PROFESSIONAL ENGINEER NO. 11328-C HAWAII USA

SIGNATURE — EXPIRATION OF LICENSE 04/30/2020

THIS WORK WAS PREPARED BY ME, OR UNDER MY SUPERVISION, AND CONSTRUCTION OF THIS PROJECT WILL BE SUPERVISED BY ME OR UNDER MY SUPERVISION (STATE DEPARTMENT OF COMMERCE AND CONSUMER AFFAIRS)

# WAILUKU CIVIC COMPLEX PHASE 1B

100% FINAL DESIGN

NOT FOR CONSTRUCTION

SHEET TITLE: PLAN AND PROFILE: ROADWAY AND WATERLINE - PILI STREET

REVISIONS:

CADD FILE:

PROJECT:

DRAWN:

DATE: 7/25/2019

PHASE 1B

SHEET CU134

OF SHEETS

COPYRIGHT PROTECTED: THIS WORK IS PROTECTED UNDER THE 1990 ARCHITECTURAL WORKS COPYRIGHT PROTECTION ACT

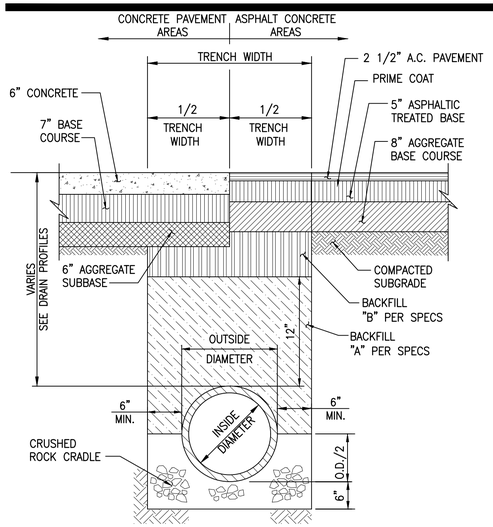


## 1 CU501 DRAIN LINE TRENCH DETAIL

NOT TO SCALE

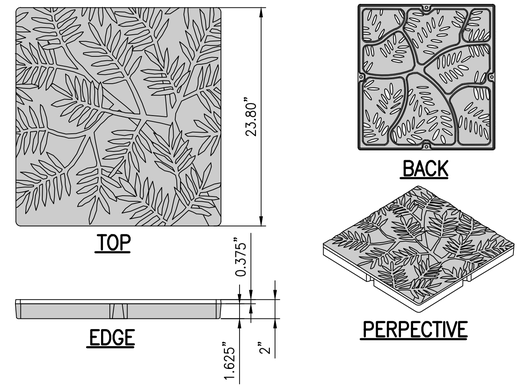


### NOTES:

1. MATERIAL: CAST IRON
2. FINISH: BAKED ON OIL FINISH
3. TOTAL THICKNESS: 2"
4. REPLACES DRAIN MANUFACTURED BY: NDS 2400 SERIES
5. NO OPENING GREATER THAN 1/2"
6. DUE TO CASTING INCONSISTENCIES ALL DIMENSION ARE NOMINAL
7. GRATES SHALL BE TRAFFIC RATED WHEN LOCATED IN VEHICULAR AREAS.

## 4 CU501 FOR 2'X2' LANDSCAPE INLET FRAME AND GRATE DETAILS

NOT TO SCALE

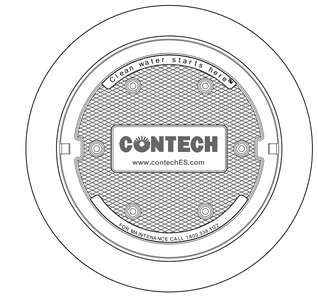


FRAME AND COVER

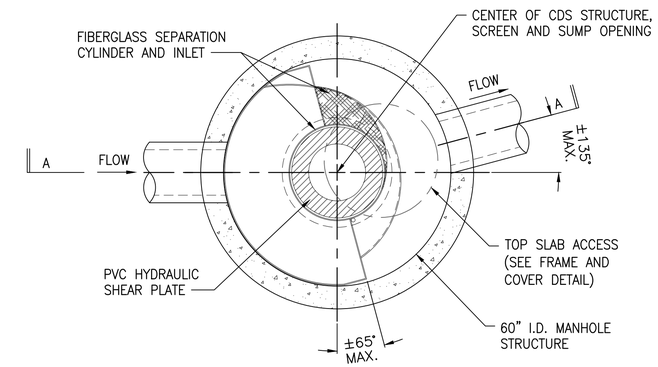


PLAN VIEW B–B

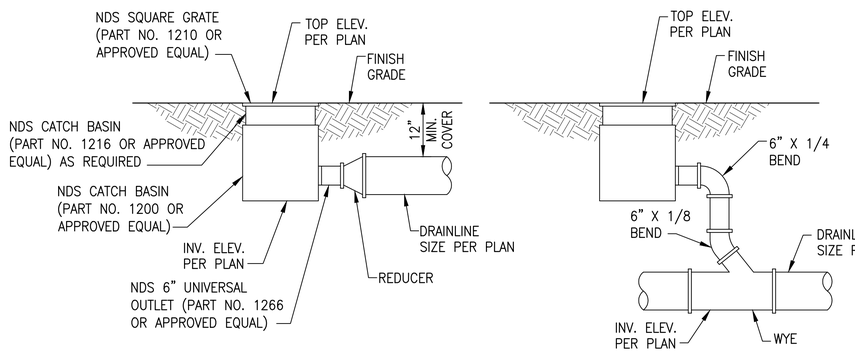


## 2 CU501 1'X1' DRAIN INLET

NOT TO SCALE

### NOTES:

1. USE NDS SQUARE GRATE PART NO. 2411 OR APPROVED EQUAL FOR 2'X2' DRAIN INLET
2. USE IRON AGE LOCUST 24" SQ. FOR 2'X2' LANDSCAPE INLET, SEE DET. 4/CU501

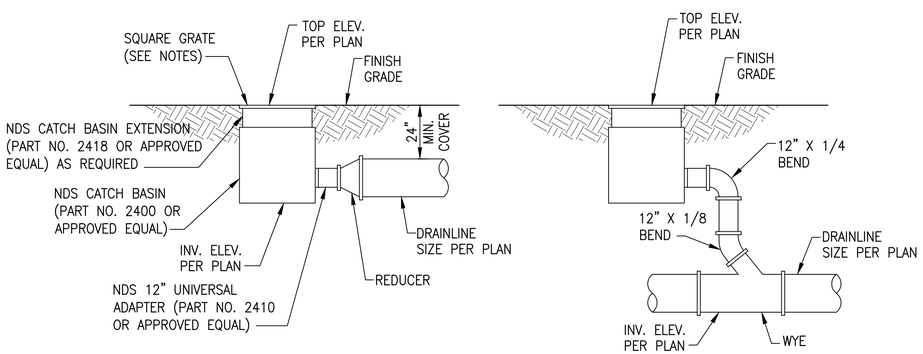


## 3 CU501 2'X2' DRAIN AND LANDSCAPE INLET

NOT TO SCALE

### GENERAL NOTES:

1. CONTECH TO PROVIDE ALL MATERIALS UNLESS NOTED OTHERWISE.
2. DIMENSIONS MARKED WITH ( ) ARE REFERENCE DIMENSIONS. ACTUAL DIMENSIONS MAY VARY.
3. FOR FABRICATION DRAWINGS WITH DETAILED STRUCTURE DIMENSIONS AND WEIGHTS, PLEASE CONTACT YOUR CONTECH ENGINEERED SOLUTIONS LLC REPRESENTATIVE. WWW.CONTECHES.COM
4. CDS WATER QUALITY STRUCTURE SHALL BE IN ACCORDANCE WITH ALL DESIGN DATA AND INFORMATION CONTAINED IN THIS DRAWING.
5. STRUCTURE SHALL MEET AASHTO HS20 AND CASTINGS SHALL MEET HS20 (AASHTO M 306) LOAD RATING, ASSUMING GROUNDWATER ELEVATION AT, OR BELOW, THE OUTLET PIPE INVERT ELEVATION. ENGINEER OF RECORD TO CONFIRM ACTUAL GROUNDWATER ELEVATION.
6. PVC HYDRAULIC SHEAR PLATE IS PLACED ON SHELF AT BOTTOM OF SCREEN CYLINDER. REMOVE AND REPLACE AS NECESSARY DURING MAINTENANCE CLEANING.

### INSTALLATION NOTES:

A. ANY SUB–BASE, BACKFILL DEPTH, AND/OR ANTI–FLOTATION PROVISIONS ARE SITE–SPECIFIC DESIGN CONSIDERATIONS AND SHALL BE SPECIFIED BY ENGINEER OF RECORD.
B. CONTRACTOR TO PROVIDE EQUIPMENT WITH SUFFICIENT LIFTING AND REACH CAPACITY TO LIFT AND SET THE CDS MANHOLE STRUCTURE (LIFTING CLUTCHES PROVIDED).
C. CONTRACTOR TO ADD JOINT SEALANT BETWEEN ALL STRUCTURE SECTIONS, AND ASSEMBLE STRUCTURE.
D. CONTRACTOR TO PROVIDE, INSTALL, AND GROUT PIPES. MATCH PIPE INVERTS WITH ELEVATIONS SHOWN.
E. CONTRACTOR TO TAKE APPROPRIATE MEASURES TO ASSURE UNIT IS WATER TIGHT, HOLDING WATER TO FLOWLINE INVERT MINIMUM. IT IS SUGGESTED THAT ALL JOINTS BELOW PIPE INVERTS ARE GROUTED.

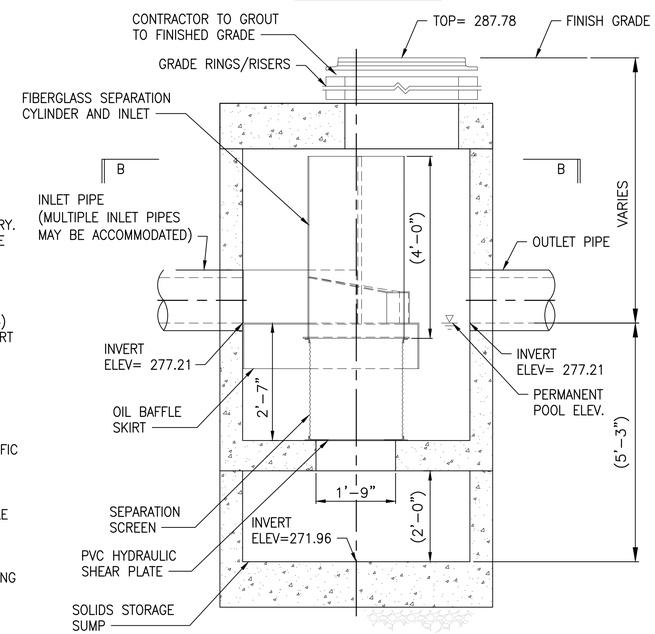


SECTION A–A

## 5 CU501 CDS2020–5–C INLINE CDS DETAIL

NOT TO SCALE


FERRARO CHOI
FERRARO CHOI AND ASSOCIATES LTD
ARCHITECTURE / INTERIOR ARCHITECTURE / RESEARCH
733 BISHOP ST, SUITE 2620 HONOLULU HI 96813-4016
TEL 808 533 8880 FAX 808 599 3769 www.ferrarochoi.com


WENDY G. McLAIN LICENSED PROFESSIONAL ENGINEER NO. 11328-C HAWAII USA

SIGNATURE | EXPIRATION OF LICENSE 04/30/2020

THIS WORK WAS PREPARED BY ME OR UNDER MY SUPERVISION AND CONSTRUCTION OF THIS PROJECT WILL BE UNDER MY OBSERVATION (PER HAR 16-115-DEPARTMENT OF COMMERCE AND CONSUMER AFFAIRS)

WAILUKU CIVIC COMPLEX PHASE 1B

100% FINAL DESIGN

NOT FOR CONSTRUCTION

SHEET TITLE: DRAIN DETAILS

REVISIONS:

CADD FILE:

PROJECT:

DRAWN:

DATE: 7/25/2019

PHASE 1B | SHEET CU501 | OF SHEETS


COPYRIGHT PROTECTED: THIS WORK IS PROTECTED UNDER THE 1990 ARCHITECTURAL WORKS COPYRIGHT PROTECTION ACT

THE FOLLOWING DETAILS AS SHOWN ON "WATER SYSTEM STANDARDS 2002" ARE SPECIFICALLY REFERENCED WITHIN THESE PLANS AND SHALL BE CONSIDERED PART OF THE CONSTRUCTION DRAWINGS. (THIS SHALL NOT BE CONSTRUED TO RELIEVE THE CONTRACTOR FROM COMPLYING WITH ALL PERTINENT PARTS OF THE AFOREMENTIONED LIST, STANDARD DETAILS, AND STANDARDS.)

| DETAIL | DESCRIPTION |
|---|---|
| FH6 | HYDRANT CONNECTION – STRAIGHT RUN |
| FH9 | HYDRANT CONCRETE SLAB AND REFLECTOR POST |
| L24 | TYPICAL SERVICE LATERAL |
| L25 AND L26 | SINGLE SERVICE LATERAL TYPE "A", 5/8" & 3/4" METERS |
| L29 AND L30 | SINGLE SERVICE LATERAL TYPE "B", 1" METER |
| V23 | ARV INSTALLATION TYPE "F" MANHOLE |

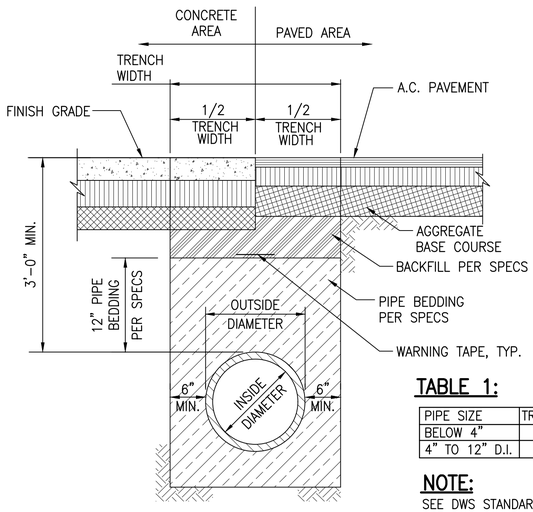


**TABLE 1:**

| PIPE SIZE | TRENCH WIDTH |
|---|---|
| BELOW 4" | 12" |
| 4" TO 12" D.I. | 24" |

**NOTE:**
SEE DWS STANDARD DETAIL P10 FOR DETAILS.

## 1 WATER/FIRE LINE TRENCH DETAIL
CU503 NOT TO SCALE

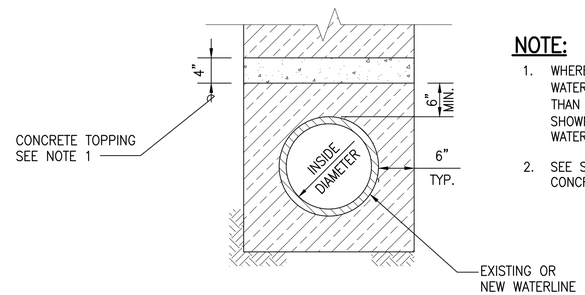


**NOTE:**

1. WHERE COVER OVER NEW OR EXISTING WATERLINE IS LESS THAN 3' BUT GREATER THAN 2', CONSTRUCT CONCRETE TOPPING AS SHOWN. IF COVER IS LESS THAN 2', JACKET WATERLINE. SEE DWS STD. DET. B1
2. SEE SHEET CU102 FOR LOCATION OF NEW CONCRETE TOPPING.

## 2 CONCRETE TOPPING
CU503 NOT TO SCALE


FERRARO CHOI
FERRARO CHOI AND ASSOCIATES LTD
ARCHITECTURE / INTERIOR ARCHITECTURE / RESEARCH
733 BISHOP ST. SUITE 2620 HONOLULU HI 96813-4016
TEL 808 533 8880 FAX 808 599 3769 www.ferrarochoi.com


WENDY G. McLAIN LICENSED PROFESSIONAL ENGINEER NO. 11328-C HAWAII USA

SIGNATURE | EXPIRATION OF LICENSE 04/30/2020

THIS WORK WAS PREPARED BY ME OR UNDER MY SUPERVISION AND CONSTRUCTION OF THIS PROJECT WILL BE UNDER MY DIRECT SUPERVISION (HAWAII DEPARTMENT OF COMMERCE AND CONSUMER AFFAIRS)

PROJECT: WAILUKU CIVIC COMPLEX PHASE 1B
100% FINAL DESIGN
NOT FOR CONSTRUCTION

REVISIONS:

SHEET TITLE: WATER AND FIRE DETAILS

DRAWN:
DATE: 7/25/2019
PHASE 1B SHEET CU503 OF SHEETS
CADD FILE:

# GENERAL PROJECT NOTES:

1. THESE NOTES ARE TO BE USED FOR GENERAL REFERENCE IN CONJUNCTION WITH, AND AS A SUPPLEMENT TO ANY WRITTEN SPECIFICATIONS, APPROVED ADDENDA, AND CHANGE ORDERS ASSOCIATED WITH THESE LANDSCAPE CONSTRUCTION DOCUMENTS.

2. CONTRACTOR SHALL PROVIDE A QUALIFIED SUPERVISOR SHALL BE PRESENT ON SITE AT ALL TIMES DURING DEMOLITION.

3. DO NOT DAMAGE TREES OR PLANTS OUTSIDE OF PROJECT LIMITS. IF ANY TREES OR PLANTS ARE ARE DAMAGED BEYOND SURVIVAL CONDITIONS AS DETERMINED BY THE OWNER'S REPRESENTATIVE, THE CONTRACTOR SHALL REMOVE SUCH TREES AND PLANTS AND REPLACE WITH THE SAME SPECIES AND SIZE AND MAINTAIN FOR THE DURATION OF CONSTRUCTION OR 12 MONTHS WHICHEVER IS GREATER AT NO COST TO THE OWNER.

4. THE LANDSCAPE CONTRACTOR SHALL COORDINATE ALL WORK WITH RELATED CONTRACTORS AND WITH THE GENERAL CONSTRUCTION OF THE PROJECT IN ORDER NOT TO IMPEDE THE PROGRESS OF THE WORK OF OTHERS OR THE CONTRACTOR'S OWN WORK. IT IS THE RESPONSIBILITY OF THE LANDSCAPE CONTRACTOR TO COORDINATE ALL CONSTRUCTION ELEMENT LOCATIONS WITH OTHER TRADES PRIOR TO INSTALLATION. THE LANDSCAPE CONTRACTOR SHALL BECOME FAMILIAR WITH THE LOCATIONS OF EXISTING AND FUTURE UNDERGROUND SERVICES AND IMPROVEMENTS WHICH MAY CONFLICT WITH THE WORK TO BE DONE. NOTIFY THE OWNER'S REPRESENTATIVE IMMEDIATELY SHOULD CONFLICTS ARISE.

5. OBSERVATION VISITS TO THE JOB SITE BY THE LANDSCAPE ARCHITECT DO NOT INCLUDE INSPECTIONS OF CONSTRUCTION METHODS AND SAFETY CONDITIONS AT THE WORK SITE. THESE VISITS SHALL NOT BE CONSTRUED AS CONTINUOUS AND DETAILED INSPECTIONS.

6. VERIFY CRITICAL DIMENSIONS, REFERENCE POINT LOCATIONS AND CONSTRUCTION CONDITIONS PRIOR TO INITIATING CONSTRUCTION. NOTIFY THE OWNER'S REPRESENTATIVE IMMEDIATELY SHOULD CONFLICTS ARISE.

7. CONSTRUCTION DETAILING, MATERIALS, EQUIPMENT AND PRODUCTS OTHER THAN THOSE SPECIFIED WITHIN THESE PLANS MAY BE CONSIDERED FOR USE PROVIDED PRIOR WRITTEN APPROVAL IS OBTAINED FROM THE OWNER, THE OWNER'S REPRESENTATIVE OR THE APPLICABLE GOVERNING AUTHORITY (AS REQUIRED) PRIOR TO IMPLEMENTATION.

8. AREAS TO BE PROTECTED FROM GRADING OR CONSTRUCTION DISTURBANCE ARE FENCED OR ROPED-OFF WITH YELLOW ROPES AS PER PLANS BY THE CIVIL ENGINEER AND APPROVED BY OWNER'S REPRESENTATIVE PRIOR TO CONSTRUCTION. LANDSCAPE CONTRACTOR SHALL PERFORM ALL CONSTRUCTION ACTIVITY OUTSIDE OF PROTECTED AREAS AND SHALL BE RESPONSIBLE FOR MAINTAINING THE INTEGRITY OF PROTECTED AREAS ON A DAILY BASIS. DAMAGED AREAS THAT HAVE BEEN DESIGNATED TO BE PROTECTED SHALL BE RESTORED TO ORIGINAL CONDITIONS AT LANDSCAPE CONTRACTORS EXPENSE.

9. LANDSCAPE CONTRACTOR SHALL BE FAMILIAR WITH AND ADHERE TO ALL LOCAL, STATE AND FEDERAL CODES AND REGULATIONS PERTAINING TO THE PROJECT WORK. ANY CONFLICTS MUST BE BROUGHT TO THE ATTENTION OF THE OWNER'S REPRESENTATIVE IMMEDIATELY.

10. LANDSCAPE CONTRACTOR SHALL INSPECT THE CONDITION OF EXISTING WORK FOR DEFECTS PRIOR TO BEGINNING WORK. ALL HARDSCAPE WILL BE REVIEWED DURING THE FINAL ACCEPTANCE WALK. ANY DAMAGE DUE TO THE LANDSCAPE CONTRACTOR WORK SHALL BE REPAIRED AT THEIR EXPENSE.

11. WHERE 2 OR MORE REQUIREMENTS CREATE OVERLAPPING CONDITIONS, CONFLICTS SHALL BE BROUGHT TO THE ATTENTION OF THE OWNER'S REPRESENTATIVE IMMEDIATELY FOR INTERPRETATION.

12. ALL MEP, FP SYSTEM COMPONENTS THAT REQUIRE PERIODIC MAINTENANCE AND ARE LOCATED WITHIN THE LANDSCAPE OR ROCKWORK MUST BE ACCESSIBLE FROM ACCESS PANELS AND BE LOCATED WITHIN 2'l0" OF RESPECTIVE ACCESS PANELS. ALL NECESSARY ACCESS PANELS ARC INCLUDED IN THE LANDSCAPE CONTRACTORS SCOPE. OFFSETTING MAY BE REQUIRED AND NOT NECESSARILY DEPICTED ON THE CONTRACT DOCUMENTS WILL BE AT NO ADDITIONAL COST TO THE OWNER. THE LANDSCAPE CONTRACTOR MAY ELECT, SUBJECT TO PRIOR APPROVAL, TO PROVIDE ALTERNATE METHODS OF ACCEPTABLE ACCESSIBILITY SUCH AS PERMANENT WORK PLATFORMS AND/OR LADDERS AT NO ADDITIONAL COST TO THE OWNER. THIS WORK IS TO INCLUDE APPARATUSES SUCH AS LIGHTING, RAILINGS, ETC. AS MAY BE REQUIRED BY RESPECTIVE GOVERNING AUTHORITIES.

13. THE LANDSCAPE CONTRACTOR AND ITS SUBCONTRACTORS SHALL DILIGENTLY CROSS-REFERENCE ALL CONTRACT DOCUMENTS. SHOULD LANDSCAPE CONTRACTOR NOTE OBVIOUS TECHNICAL OVERSIGHTS (I.E. LIGHT WITH NO ELECTRICAL HOOK-UP, IRRIGATION HEAD WITH NO CONNECTION TO WATER), IT IS TO BE ASSUMED THAT THIS WORK IS INCLUDED WITHIN THE BASE BID AMOUNT.

14. NEITHER THE LANDSCAPE ARCHITECT, THE OWNER, NOR OWNER'S REPRESENTATIVE WILL BE RESPONSIBLE FOR, OR HAVE CONTROL OR CHARGE OF, CONSTRUCTION MEANS, METHODS, TECHNIQUES, SEQUENCES OR PROCEDURES, OR FOR SAFETY PRECAUTIONS AND PROGRAMS IN CONNECTION WITH THE WORK IN ACCORDANCE WITH THE CONTRACT DOCUMENTS. NEITHER THE LANDSCAPE ARCHITECT, THE OWNER, NOR THE OWNER'S REPRESENTATIVE WILL BE RESPONSIBLE FOR, OR HAVE CONTROL OR CHARGE OVER, THE ACTS OR OMISSIONS OF THE LANDSCAPE CONTRACTOR, SUBCONTRACTOR, OR ANY OF THEIR AGENTS OR EMPLOYEES, OR ANY OTHER PERSONS PERFORMING ANY OF THE WORK.

15. IF ON ANY OCCASION THE LANDSCAPE CONTRACTOR FEELS THE OWNER OR ITS CONSULTANTS ARE REQUIRING WORK BEYOND THE CONTRACT DOCUMENTS, IT MUST BE IMMEDIATELY BROUGHT FORTH FORMALLY TO THE ATTENTION OF THE OWNER'S REPRESENTATIVE PER THE GENERAL CONDITIONS SO THAT A PROMPT RESOLUTION MAY BE DETERMINED. WITHOUT THIS NOTIFICATION, ANY CLAIMS FOR ADDITIONAL COMPENSATION BASED ON EXCESSIVE CONSTRUCTION QUALITY STANDARDS SHALL BE WAIVED.

16. PUNCH LIST WORK IN OWNER-OCCUPIED AREAS WILL BE PERFORMED DURING NON-OPERATING HOURS UNLESS APPROVED IN ADVANCE BY THE OWNER'S REPRESENTATIVE.

17. BACKSTAGE WORK (EQUIPMENT ROOMS, ETC.) WHERE ACCESS DOES NOT AFFECT OWNER'S OPERATIONS MAY PROCEED DURING OPERATING HOURS. OUTAGES THAT SUPPORT OPERATING SERVICES WILL NOT BE PERMITTED EXCEPT ON A PRIOR APPROVAL BASIS AND DURING NON-OPERATING HOURS.

18. IT IS TO BE UNDERSTOOD BY THE LANDSCAPE CONTRACTOR THAT IN ACCORDANCE WITH INDUSTRY STANDARDS, IT IS PROBABLE THAT ALL SPECIFIC CONSTRUCTION FIELD CONDITIONS ARE NOT DETAILED ON THE CONTRACT DOCUMENTS. IN THE EVENT OF THESE OCCURRENCES THE LANDSCAPE CONTRACTOR SHALL SUBMIT ITS PROPOSAL OF A DETAIL IN ACCORDANCE TO ACCEPTABLE INDUSTRY STANDARDS AND GOVERNING CODES AS WELL AS THE DESIGN INTENT OF THE CONTRACT DOCUMENTS. THE OWNER AND/OR ITS CONSULTANTS SHALL REVIEW SAID DETAIL FOR APPROVAL OR NECESSARY ALTERNATE ACCORDING TO EQUAL INDUSTRY STANDARDS. THE OWNER AND ITS CONSULTANTS WILL NOT BE RESPONSIBLE FOR ADDITIONAL COSTS OR CLAIMS TO THE WORK WITHIN THE AFORESAID POLICY.

19. IT IS THE INTENT THAT THE WORK INCLUDED UNDER EACH SECTION OF THE SPECIFICATIONS SHALL COVER THE MANUFACTURE, FABRICATION, DELIVERY, INSTALLATION, AND/OR ERECTION AND PERFORMANCE, WITH ALL INCIDENTALS THERETO, UNLESS OTHERWISE NOTED OR SPECIFIED.

20. THE LANDSCAPE CONTRACTOR IS CAUTIONED THAT WHEN A "WORK INCLUDED" OR "'SECTION INCLUDES" PARAGRAPH IS INCLUDED, IT IS INTENDED TO BE GENERAL AND IN NO WAY LIMITS OR QUALIFIES THE CONTRACT REQUIREMENTS.

21. SPECIFICATIONS AND DRAWINGS ARE INTENDED TO AGREE AND BE MUTUALLY EXPLANATORY AND SHALL BE ACCEPTED AND USED AS A WHOLE AND NOT SEPARATELY. SHOULD ANY ITEM BE OMITTED FROM THE DRAWINGS AND BE INCLUDED IN THE SPECIFICATIONS OR VICE-VERSA, IT SHALL BE EXECUTED THE SAME AS IF SHOWN AND CONTAINED IN BOTH AT NO EXTRA COST TO THE OWNER. IT IS THE INTENT OF THE DOCUMENTS FOR THE LANDSCAPE CONTRACTOR TO PROVIDE COMPLETE WORKING SYSTEMS UNLESS NOTED OTHERWISE. ANY CONFLICT OR INCONSISTENCY BETWEEN THE DRAWINGS AND SPECIFICATIONS, OR ANY DISCREPANCIES WITHIN THE DRAWINGS AND/OR SPECIFICATIONS SHALL BE SUBMITTED BY THE LANDSCAPE CONTRACTOR THROUGH THE OWNER'S REPRESENTATIVE FOR INTERPRETATION.

22. ANY EXISTING GRADE ELEVATIONS AS DEPICTED ON THE CONTRACT DOCUMENTS ARE FOR INFORMATION PURPOSES AND ARE NOT TO BE CONSTRUED AS ABSOLUTE. ANY OTHER FINISH GRADING REQUIRED TO MEET THE INDICATED FINAL GRADES WILL BE THE RESPONSIBILITY OF THE LANDSCAPE CONTRACTOR.

23. THE LANDSCAPE CONTRACTOR SHALL PREPARE SHOP DRAWINGS FOR PUBLIC SPACES AND AREA DEVELOPMENT INDICATING ALL LOCATIONS OF EXPOSED DEVICES, BOXES, COMPONENTS AND/OR EQUIPMENT.

# LANDSCAPE ABBREVIATIONS

| | |
|---|---|
| ARCH | ARCHITECTURAL |
| ℄ | BASELINE |
| BLDG | BUILDING |
| CAL | CALIPER |
| ℄ | CENTER LINE |
| CIP | CAST IN PLACE |
| CJ | CONTROL JOINT |
| CMU | CONCRETE MASONRY UNIT |
| CONC | CONCRETE |
| CY | CUBIC YARD |
| DIA | DIAMETER |
| DIAG | DIAGONAL |
| DET./DTL | DETAIL |
| DWG/DWGS | DRAWING/DRAWINGS |
| E | EASTING |
| EQ | EQUAL |
| ELEC | ELECTRICAL |
| FG | FINISH GRADE |
| FP | FIRE PROTECTION |
| GAL | GALLON |
| GALV | GALVANIZED |
| GPM | GALLON PER MINUTE |
| GPD | GALLON PER DAY |
| HT | HEIGHT |
| LA | LANDSCAPE ARCHITECT |
| LC | LANDSCAPE CONTRACTOR |
| LF | LINEAR FEET |
| MAX | MAXIMUM |
| MEP | MECHANICAL ELECTRICAL PLUMBING |
| MIN | MINIMUM |
| MH | MANHOLE |
| N | NORTHING |
| N/A | NOT APPLICABLE |
| NIC | NOT IN CONTRACT |
| NTS | NOT TO SCALE |
| O.C. | ON CENTER |
| OD | OUTSIDE DIAMETER |
| PA | PLANTING AREA |
| ℙ | PROPERTY LINE |
| POC | POINT OF CONNECTION |
| PSI | POUNDS PER SQUARE INCH |
| SF | SQUARE FEET |
| SYM | SYMBOL |
| SXSXT | SLIP SLIP THREAD |
| TYP | TYPICAL |
| TYP SYM. | TYPICAL SYMBOL |
| UNO | UNLESS NOTED OTHERWISE |
| W/ | WITH |

# GENERAL SYMBOLS

| | |
|---|---|
| & | AND |
| @ | AD |
| # | NUMBER |
| Ï | DIAMETER |
| % | PERCENT |
| = | EQUAL |
| > | GREATER THAN |
| < | LESS THAN |
| > | GREATER THAN OR EQUAL TO |
| < | LESS THAN OR EQUAL TO |
| "\|^\|> | INCH |

# LINE SYMBOLS

CENTERLINE

PROPERTY LINE

EASEMENT LINE

# LANDSCAPE SHEET INDEX


| SHEET NO. | SHEET NAME |
|---|---|
| L000 | INDEX, GENERAL NOTES, ABBREVIATIONS, SYMBOLS |
| L001 | HARDSCAPE FINISHES SCHEDULE |
| L002 | SITE FURNISHINGS SCHEDULE |
| L010 | TREE DISPOSITION PLAN |
| L011 | TREE PROTECTION DETAILS |
| L100 | OVERALL HARDSCAPE PLAN & NOTES - BASE BID |
| L101 | HARDSCAPE PLAN - BASE BID |
| L102 | HARDSCAPE PLANS - BASE BID/ DEDUCTIVE ALT. NO. D-2 |
| L103 | HARDSCAPE PLANS - BASE BID/ DEDUCTIVE ALT. NO. D-3 |
| L104 | HARDSCAPE PLANS - BASE BID/ DEDUCTIVE ALT. NO. D-4 |
| L200 | OVERALL IRRIGATION PLAN & NOTES - BASE BID |
| L201 | IRRIGATION PLAN - BASE BID |
| L202 | IRRIGATION PLAN - BASE BID/ DEDUCTIVE ALT. NO. D-2 |
| L203 | IRRIGATION PLAN - BASE BID/ DEDUCTIVE ALT. NO. D-3 |
| L204 | IRRIGATION PLAN - BASE BID/ DEDUCTIVE ALT. NO. D-4 |
| L220 | IRRIGATION SCHEDULE |
| L230 | IRRIGATION DETAILS - 1 |
| L231 | IRRIGATION DETAILS - 2 |
| L232 | IRRIGATION DETAILS - 3 |
| L300 | OVERALL PLANTING PLAN & NOTES - BASE BID |
| L301 | PLANTING PLAN - BASE BID |
| L302 | PLANTING PLAN - BASE BID/ DEDUCTIVE ALT. NO. D-2 |
| L303 | PLANTING PLAN - BASE BID/ DEDUCTIVE ALT. NO. D-3 |
| L304 | PLANTING PLAN - BASE BID/ DEDUCTIVE ALT. NO. D-4 |
| L320 | PLANTING SCHEDULE - 1 BASE BID |
| L321 | PLANTING SCHEDULE - 2 BASE BID/DEDUCTIVE ALT. |
| L322 | PLANTING NOTES & MATERIALS SCHEDULE |
| L330 | PLANTING DETAILS - 1 |
| L331 | PLANTING DETAILS - 2 |
| L332 | PLANTING DETAILS - BASE BID/DEDUCTIVE ALT. |
| L401 | LANDSCAPE SECTIONS |
| L501 | HARDSCAPE DETAILS - 1 |
| L502 | HARDSCAPE DETAILS - 2 |
| L503 | HARDSCAPE DETAILS - 3 |
| L504 | HARDSCAPE DETAILS - 4 |
| L505 | RAILING DETAILS |



FERRARO CHOI

FERRARO CHOI AND ASSOCIATES LTD
ARCHITECTURE / INTERIOR ARCHITECTURE / RESEARCH
733 BISHOP ST. SUITE 2620 HONOLULU HI 96813-4016
TEL 808 533 8880 FAX 808 599 3769 www.ferrarochoi.com


R. STANLEY DUNCAN ★ LICENSED PROFESSIONAL LANDSCAPE ARCHITECT ★ No. 5815 ★ HAWAII ★ U.S.A.

EXPIRATION DATE OF LICENSE: 4/30/2020

SIGNATURE

THIS WORK WAS PREPARED BY ME, OR UNDER MY SUPERVISION AND CONSTRUCTION OF THIS PROJECT WILL BE SUPERVISED BY ME, OR UNDER MY SUPERVISION (AS REQUIRED BY COMMERCE AND CONSUMER AFFAIRS)

WAILUKU CIVIC COMPLEX PHASE 1B

100% FINAL DESIGN

NOT FOR CONSTRUCTION

SHEET TITLE: GENERAL NOTES, ABBREV. & INDEX

CADD FILE:

REVISIONS:

PROJECT: 2017-001

DRAWN: PBR

DATE: 7/25/2019

PHASE 1B

SHEET L000 OF SHEETS


COPYRIGHT PROTECTED: THIS WORK IS PROTECTED UNDER THE 1990 ARCHITECTURAL WORKS COPYRIGHT PROTECTION ACT

## HARDSCAPE FINISHES SCHEDULE

| SYMBOL | TYPE | MATERIAL | COLOR | FINISH | PATTERN | SEALER/ STAIN/ PAINT | CAULK/ GROUT |
|---|---|---|---|---|---|---|---|
| | **CP-1A** | Reinforced Portland cement concrete walkway | Standard gray | Medium brush broom | See hardscape plans for scoring pattern | Penetrating water-based alkyd sealer w/ low to no gloss finish | Match concrete |
| | **CP-1B** | Reinforced Portland cement concrete walkway | Standard gray | Swept brush w/ medium rock salt | See hardscape detail for pattern | Penetrating water-based alkyd sealer w/ low to no gloss finish | Match concrete |
| | **CP-2A** | Reinforced Portland cement concrete driveway | Standard gray | Medium brush broom | See hardscape plans for scoring pattern | Penetrating water-based alkyd sealer w/ low to no gloss finish | Match concrete |
| | **CP-2B** | Reinforced Portland cement concrete driveway | Standard gray | Swept brush w/ medium rock salt | See hardscape detail for pattern | Penetrating water-based alkyd sealer w/ low to no gloss finish | Match concrete |
| | **W-1** | Cast-in-place concrete planter wall w/ moss rock veneer (see structural dwgs for concrete wall) | Moss rock color | Rough, 12"-36" DIA, full corner pieces | Hidden mortar joints for dry stack appearance | Penetrating stain | Grout to match darkest of rock veneer color |
| | **W-3** | Cast-in-place low retaining concrete wall, painted (see structural dwgs for concrete wall) | Matched adjacent building except where noted | Matched adjacent building | NA | NA | NA |
| | **W-5** | Moss rock wall to match existing rock planter wall at First Hawaiian Bank (use salvaged rocks from demolition if possible) | Color to match existing rock planter walls | NA | NA | NA | NA |
| | **CP-5** | 6" x 24" Stepstone Cal Arc Narrow Modular precast concrete paver w/ center false joint (5000 PSI Hardrock concrete, Type III Cement) OR acceptable equal | Caramel #1810 | Medium sandblast | Running bond perpendicular to banding | Color-enhancing, penetrating water-based alkyd sealer w/ low to no gloss finish | Match concrete paver |

FERRARO CHOI
FERRARO CHOI AND ASSOCIATES LTD
ARCHITECTURE / INTERIOR ARCHITECTURE / RESEARCH
733 BISHOP ST. SUITE 2620 HONOLULU HI 96813-4016
TEL 808 533 8880 FAX 808 599 3769 www.ferrarochoi.com

R. STANLEY DUNCAN ★ LICENSED PROFESSIONAL LANDSCAPE ARCHITECT No. 5815 ★ HAWAII, U.S.A.

SIGNATURE: R. Stanley Duncan
EXPIRATION DATE OF LICENSE: 4/30/2021
THIS WORK WAS PREPARED BY ME, OR UNDER MY SUPERVISION AND CONSTRUCTION OF THIS PROJECT WILL BE OBSERVED BY ME OR MY AUTHORIZED REPRESENTATIVE. (HRS 464-1 AS AMENDED)

# WAILUKU CIVIC COMPLEX PHASE 1B

100% FINAL DESIGN
NOT FOR CONSTRUCTION

SHEET TITLE: HARDSCAPE FINISHES SCHEDULE

CADD FILE:

REVISIONS:
△
△
△
△

PROJECT: 2017-001
DRAWN: PBR
DATE: 7/25/2019
PHASE 1B
SHEET L001
OF SHEETS

COPYRIGHT PROTECTED: THIS WORK IS PROTECTED UNDER THE 1990 ARCHITECTURAL WORKS COPYRIGHT PROTECTION ACT

## SITE FURNISHINGS SCHEDULE (BASE BID)

| SYMBOL | TYPE | MATERIAL | COLOR | FINISH | THICKNESS | PATTERN |
|---|---|---|---|---|---|---|
| | **Bike Rack** | Landscapeforms Ring Bike Rack (1.5" O.D. 120" wall stainless steel tubing), 25" W x 27" H, embed mount; OR acceptable equal | Stainless steel | Electropolish | NA | NA |
| | **Bollard** | Urban Accessories DG4 cast recycled aluminum tapered base bollard w/ cast silicon-bronze cap; OR acceptable equal | Brahman Beige | Polished bronze cap; Powder coat finish with zinc-rich primer | NA | NA |
| | **Removable Bollard** | Urban Accessories DG4 cast recycled aluminum tapered base bollard w/ cast silicon-bronze cap, including upper base pate and inground base w/ pipe sleeve; OR acceptable equal | Brahman Beige | Polished bronze cap; Powder coat finish with zinc-rich primer | NA | NA |
| | **Tree Grate 5x5** | Iron Age "Interlaken" 5ft x 5ft Cast iron tree grate w/ openings less than 1/2" & matching metal frame as recommended by manufacturer; OR acceptable equal for tree grate and metal frame | NA | Baked on oil | 1.25" edge thickness | Circles and diamonds |


FERRARO CHOI

FERRARO CHOI AND ASSOCIATES LTD
ARCHITECTURE / INTERIOR ARCHITECTURE / RESEARCH
733 BISHOP ST. SUITE 2620 HONOLULU HI 96813-4016
TEL 808 533 8880 FAX 808 599 3769 www.ferrarochoi.com


STANLEY DUNCAN ★ LICENSED PROFESSIONAL LANDSCAPE ARCHITECT No. 5815 ★ HAWAII U.S.A.

SIGNATURE: R. Stanley Duncan

EXPIRATION DATE OF LICENSE: 4/30/2020

THIS WORK WAS PREPARED BY ME, OR UNDER MY SUPERVISION AND CONSTRUCTION OF THIS PROJECT WILL BE SUPERVISED BY ME OR UNDER MY SUPERVISION. (HRS 464-1 AND HAR 16-115 COMMERCE AND CONSUMER AFFAIRS)

# WAILUKU CIVIC COMPLEX PHASE 1B

100% FINAL DESIGN

NOT FOR CONSTRUCTION

SHEET TITLE:

SITE FURNISHINGS SCHEDULE

CADD FILE:

PROJECT: 2017-001

REVISIONS:

DRAWN: PBR

DATE: 7/25/2019

PHASE 1B

SHEET L002

OF SHEETS


COPYRIGHT PROTECTED: THIS WORK IS PROTECTED UNDER THE 1990 ARCHITECTURAL WORKS COPYRIGHT PROTECTION ACT

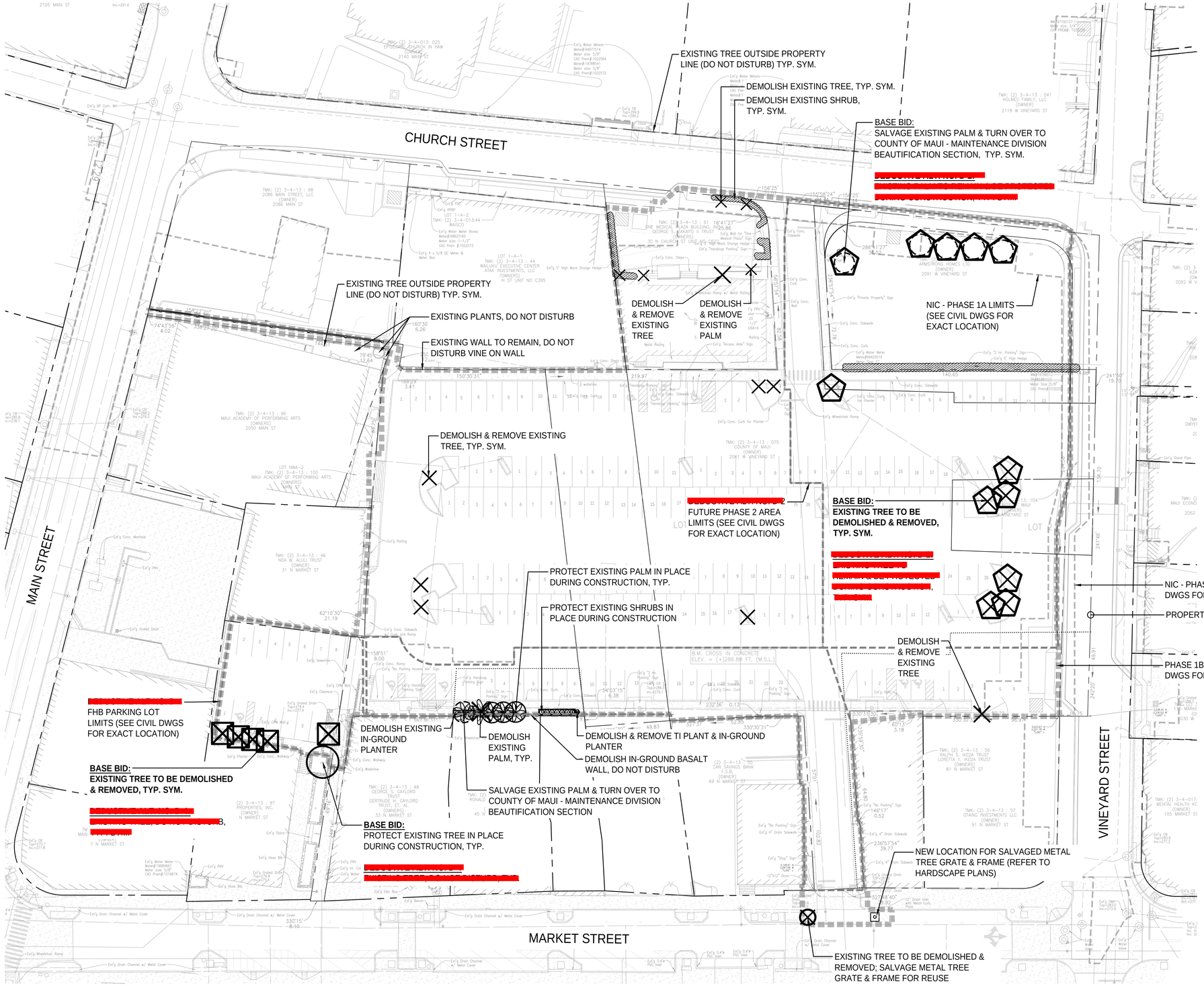


1 TREE DISPOSITION PLAN

SCALE: 1" = 30'-0"

NOTES:

1. LOCATION & QUANTITY OF TREES, PALMS, AND SHRUBS ARE APPROXIMATE. FIELD CONDITIONS MAY VARY. CONTRACTOR SHALL VERIFY ON SITE AND NOTIFY LANDSCAPE ARCHITECT OF DISCREPANCIES PRIOR TO CONSTRUCTION.
2. DEMOLISH ALL EXISTING PLANTS WITHIN PROJECT LIMITS UNLESS OTHERWISE NOTED ON PLAN.
3. DO NOT DISTURB PLANTS OUTSIDE OF PROJECT LIMITS.
4. PROVIDE FENCE PROTECTION FOR TREES/PALMS & SHRUBS TO REMAIN, REFER TO TREE PROTECTION DETAIL & NOTES.
5. REFER TO CIVIL DRAWINGS FOR ALL HARDSCAPE & UTILITY DEMOLITION.

## BASE BID LEGEND

| SYMBOL | QTY | DESCRIPTION |
|---|---|---|
| | 3 | EXISTING PALM TO REMAIN; PROTECT IN PLACE DURING CONSTRUCTION |
| | 7 | EXISTING SHRUB TO REMAIN; PROTECT IN PLACE DURING CONSTRUCTION |
| | 13 | EXISTING TREE TO BE DEMOLISHED & REMOVED |
| | 2 | EXISTING PALM TO BE DEMOLISHED & REMOVED |
| | 1 | SALVAGE EXISTING PALM & TURN OVER TO COUNTY OF MAUI - MAINTENANCE DIVISION BEAUTIFICATION SECTION |
| | APPROX. 1400 SF | EXISTING SHRUBS TO BE DEMOLISHED & REMOVED |

## DEDUCTIVE ALT. NO. D-2 LEGEND

| SYMBOL | QTY | BASE BID | DEDUCTIVE ALT. NO. D-2 |
|---|---|---|---|
| | 7 | EXISTING TREE TO BE DEMOLISHED & REMOVED | EXISTING TREE TO BE PROTECTED DURING CONSTRUCTION |
| | 5 | SALVAGE EXISTING PALM & TURN OVER TO COUNTY OF MAUI - MAINTENANCE DIVISION BEAUTIFICATION SECTION | EXISTING PALM TO BE PROTECTED DURING CONSTRUCTION |

## DEDUCTIVE ALT. NO. D-4 LEGEND

| SYMBOL | QTY | BASE BID | DEDUCTIVE ALT. NO. D-4 |
|---|---|---|---|
| | 1 | EXISTING TREE TO BE PROTECTED DURING CONSTRUCTION | EXISTING TREE TO REMAIN |
| | 5 | EXISTING TREE TO BE DEMOLISHED & REMOVED | EXISTING TREE TO REMAIN |

FERRARO CHOI
FERRARO CHOI AND ASSOCIATES LTD
ARCHITECTURE / INTERIOR ARCHITECTURE / RESEARCH
733 BISHOP ST. SUITE 2620 HONOLULU HI 96813-4016
TEL 808 533 8880 FAX 808 599 3769 www.ferrarochoi.com

STANLEY DUNCAN LICENSED PROFESSIONAL LANDSCAPE ARCHITECT No. 5815 HAWAII U.S.A.

SIGNATURE: R. Stanley Duncan
EXPIRATION DATE OF LICENSE: April 30, 2020

THIS WORK WAS PREPARED BY ME OR UNDER MY SUPERVISION AND CONSTRUCTION CR. THIS PROJECT WILL BE CONSTRUCTED UNDER THE 1990 ARCHITECTURAL WORKS COPYRIGHT PROTECTION ACT (COMMERCE AND CONSUMER AFFAIRS)

# WAILUKU CIVIC COMPLEX PHASE 1B

100% FINAL DESIGN

NOT FOR CONSTRUCTION

SHEET TITLE: TREE DISPOSITION PLAN

CADD FILE:

REVISIONS: △ △ △ △ △

PROJECT: 2017-001

DRAWN: PBR

DATE: 7/25/2019

PHASE 1B

SHEET L010

OF SHEETS

COPYRIGHT PROTECTED: THIS WORK IS PROTECTED UNDER THE 1990 ARCHITECTURAL WORKS COPYRIGHT PROTECTION ACT

DETAIL - WARNING SIGN

NOTES:

1. MINIMUM SIZE OF SIGN: 8 ½" X 11".
2. SECURELY FASTEN TO FENCE.
3. PROVIDE FOUR (4) SIGNS MINIMUM FOR EACH TREE PROTECTION ZONE. EVENLY DISTRIBUTE SIGNS ON ALL SIDES OF PROTECTED TREE(S) SO SIGN IS VISIBLE WHEN APPROACHING TREE FROM MULTIPLE DIRECTIONS.
4. HANG MORE THAN FOUR (4) SIGNS FOR VISIBILITY PURPOSES IF NEEDED.
5. SIGN TO BE MADE OF WEATHERPROOF MATERIAL.
6. CONFIRM PHONE NUMBER SHOWN ON SIGN WITH MAUI COUNTY DEPARTMENT OF PUBLIC WORKS PRIOR TO SIGN FABRICATION.

## 1 TREE PROTECTION ZONE WARNING SIGN

NOT TO SCALE

TREE PROTECTION ZONE:

1. PROVIDE TREE PROTECTION FOR ALL TREES IDENTIFIED ON THE PLANS. ALL TREES 24" CALIPER OR GREATER (AS MEASURED AT 4½ FEET HEIGHT) WITHIN THE CONSTRUCTION LIMITS OF WORK SHALL BE PROTECTED UNLESS OTHERWISE NOTED. IF TREES OTHER THAN THOSE DESIGNATED FOR REMOVAL ARE DAMAGED BEYOND SURVIVAL CONDITION AS DETERMINED BY THE LANDSCAPE ARCHITECT, THE CONTRACTOR SHALL REMOVE SUCH TREES AND REPLACE WITH A TREE OF THE SAME SPECIES AND SIZE AND MAINTAIN FOR THE DURATION OF THE CONSTRUCTION OR 12 MONTHS WHICHEVER IS GREATER AT NO COST TO THE OWNER.
2. THE RECOMMENDED TREE PROTECTION ZONE SHOULD BE LOCATED AT THE OUTER DRIP LINE OF THE CANOPY OF THE TREE. HOWEVER, THE MINIMUM PROTECTION ZONE AROUND A TREE SHOULD BE AT LEAST 20 FEET FROM THE EXTERNAL SURFACE OF THE TREE'S TRUNK. FOR ALL PALMS, THE MINIMUM PROTECTION ZONE SHOULD BE AT LEAST 10 FEET.
3. ALL UNDERGROUND UTILITIES AND IRRIGATION LINES SHOULD BE ROUTED OUTSIDE OF THE TREE PROTECTION ZONE. IF UTILITIES MUST TRAVERSE THE TREE PROTECTION ZONE, THEY SHALL BE TUNNELED OR BORED AT A DEPTH OF 4 FEET OR GREATER WITHIN THE TREE PROTECTION ZONE.
4. ALL PROTECTED TREES SHALL BE LISTED ON THE DEMOLITION, LANDSCAPE, GRADING AND UTILITIES PLANS. IF THERE IS A A DISCREPANCY WITH ALL PLANS, CONTRACTOR SHALL CONTACT LANDSCAPE ARCHITECT IMMEDIATELY.
5. PROTECTIVE FENCES SHALL BE ERECTED AROUND TREES IDENTIFIED ON PLAN OR TREES WITH A TRUNK DIAMETER GREATER THAN 24 INCHES (AS MEASURED AT A HEIGHT OF 4½ FEET). WITHIN THE CONSTRUCTION LIMITS OF WORK, PROTECTIVE FENCE SHALL BE 4 FEET HIGH ORANGE PLASTIC MESH OR APPROVED EQUIVALENT SUPPORTED ON STEEL T-POST A MINIMUM OF 6 FEET LONG. PROTECTIVE FENCE SHALL SURROUND TREE AT A MINIMUM OF 20 FEET FROM TREE TRUNK (10 FEET MINIMUM FOR PALMS) WITH STEEL T-POST AT A MINIMUM OF 5 FEET ON CENTER. FENCE SHALL BE INSTALLED PRIOR TO ANY DEMOLITION WORK AND SHALL REMAIN IN PLACE UNTIL SITE WORK IS COMPLETED. AT THE MINIMUM, SIGNS SHALL BE POSTED ON ALL FOUR SIDES OF TREE, SEE DETAIL 1 THIS SHEET FOR TREE PROTECTION SIGNAGE REQUIREMENTS.
6. FOR THE DURATION OF CONSTRUCTION WITHIN THE DRIP LINE OF THE TREES TO REMAIN THERE MUST BE:
   - NO CHANGES, ALTERATION OR DISTURBANCE TO THE GRADE BY ADDING FILL, EXCAVATING OR SCRAPING EXCEPT AS NOTED ON PLANS;
   - NO STORAGE OF CONSTRUCTION MATERIALS OR EQUIPMENT;
   - NO STOCKPILING OF ANY CONSTRUCTION MATERIALS OR EXCAVATED MATERIALS;
   - NO DISPOSAL OF ANY LIQUIDS e.g. CONCRETE SLEUTH, GAS, OIL, PAINT;
   - NO VEHICULAR TRAFFIC, EQUIPMENT OR EXCESSIVE PEDESTRIAN TRAFFIC;
   - NO ATTACHMENT OF ANY WIRES, ROPES, LIGHTS OR ANY OTHER SUCH ATTACHMENT OTHER THAN THOSE OF A PROTECTIVE NATURE TO ANY TREE TO BE PRESERVED;
   - NO CLEANING OF EQUIPMENT OR MATERIAL UNDER THE CANOPY OF ANY TREE OR GROUP OF TREES TO BE PRESERVED
7. AUGER TUNNELING, NOT TRENCHING, SHALL BE USED WHERE POSSIBLE FOR UTILITY PLACEMENT WITHIN THE DRIP LINE OF THE TREE. IF TRENCHING IS NECESSARY IT SHALL BE HAND DUG WITHIN THE DRIP LINE OF THE TREE. ALL AUGER TUNNELING AND/OR HAND DUG TRENCHING DONE WITHIN THE DRIP LINE OF THE TREE OR PALM SHALL BE DONE UNDER THE DIRECT SUPERVISION OF A CERTIFIED ARBORIST.

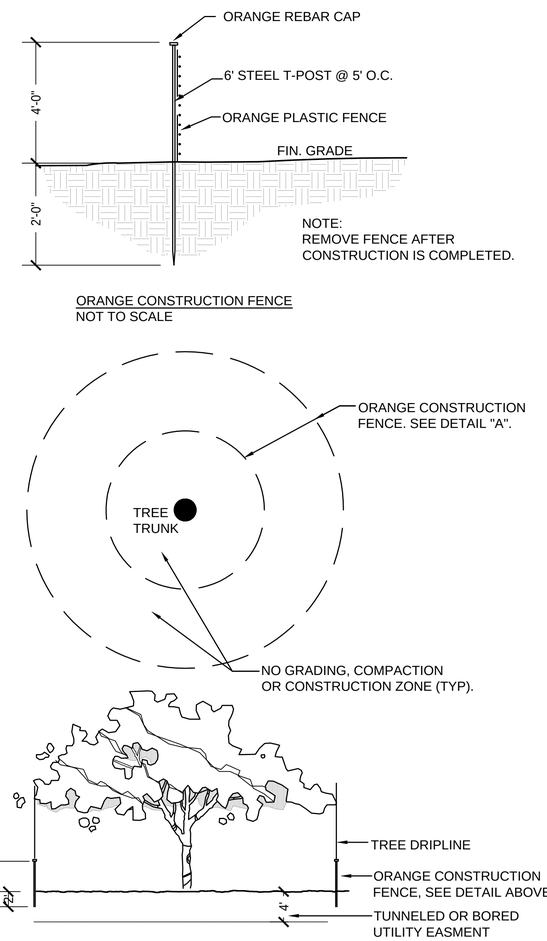


## 2 TREE & PALM PROTECTION

NOT TO SCALE

03293.01–10

FERRARO CHOI

FERRARO CHOI AND ASSOCIATES LTD
ARCHITECTURE / INTERIOR ARCHITECTURE / RESEARCH
733 BISHOP ST. SUITE 2620 HONOLULU HI 96813-4016
TEL 808 533 8880 FAX 808 599 3769 www.ferrarochoi.com

R. STANLEY DUNCAN ★ LICENSED PROFESSIONAL LANDSCAPE ARCHITECT No. 5815 ★ HAWAII, U.S.A.

SIGNATURE: R. Stanley Duncan
EXPIRATION DATE OF LICENSE: 4/30/2021

THIS WORK WAS PREPARED BY ME, OR UNDER MY SUPERVISION AND CONSTITUTES THE PROJECT WILL BE ACCEPTED BY THE DEPARTMENT OF COMMERCE AND CONSUMER AFFAIRS)

# WAILUKU CIVIC COMPLEX PHASE 1B

100% FINAL DESIGN

NOT FOR CONSTRUCTION

SHEET TITLE: TREE PROTECTION DETAILS

CADD FILE:

REVISIONS:

| | |
|---|---|
| PROJECT: | 2017-001 |
| DRAWN: | PBR |
| DATE: | 7/25/2019 |
| PHASE | 1B |
| SHEET | L011 |
| OF | SHEETS |

COPYRIGHT PROTECTED: THIS WORK IS PROTECTED UNDER THE 1990 ARCHITECTURAL WORKS COPYRIGHT PROTECTION ACT

# HARDSCAPE NOTES:

1. PA = PLANTING AREA
2. ALL LIGHT POST AND LIGHTING LOCATIONS ARE DIAGRAMMATIC. REFER TO ELECTRICAL AND LIGHTING PLANS FOR EXACT LOCATION AND FIXTURE TYPES.
3. SEE CIVIL DRAWINGS FOR GRADING & UTILITIES, LAYOUT PLANS, CONCRETE JOINTING DETAILS, CONCRETE WALKWAY AND DRIVEWAY DETAILS, AND CONCRETE RAMP DETAILS.
4. SEE ARCH. & STRUCTURAL DRAWINGS FOR CONCRETE STAIR DETAILS.
5. SEE ARCH. DRAWINGS FOR ALL LED HANDRAIL DETAILS & SPECIFICATIONS.
6. ALL CONCRETE STEPS & RAMPS MEDIUM BRUSH BROOM FINISH SHALL BE PERPENDICULAR TO DIRECTION OF TRAVEL.
7. REFER TO HARDSCAPE FINISHES SCHEDULE ON L001 FOR DETAILED PAVING COLORS, FINISHES & SEALANT INFORMATION.
8. REFER TO SITE FURNISHINGS SCHEDULE L002 FOR MATERIALS, COLORS, & FINISHES.
9. REFER TO DETAIL 2/ L501 FOR CONCRETE PAVING FINISH DETAIL.
10. ALL WALKWAY, DRIVEWAY, STAIR, AND RAMP SURFACES SHALL HAVE A MIN. WET DYNAMIC COEFFICIENT OF FRICTION (DCOF) OF 0.6 FOR LEVEL SURFACES AND 0.8 FOR SLOPED SURFACES GREATER THAN 5%.
11. REFER TO DETAIL 3/ L501 FOR TYPICAL BIKE RACK INSTALLATION DETAIL.
12. REFER TO PLANTING PLANS FOR TREES & PLANT PLACEMENT.

## HARDSCAPE FINISHES LEGEND

| | |
|---|---|
| CP-1A | MEDIUM BRUSH BROOM FINISH (STANDARD CONCRETE WALKWAY) |
| CP-1B | BANDING: SWEPT BRUSH W/ MEDIUM ROCK SALT (STANDARD CONCRETE WALKWAY) |
| CP-2A | MEDIUM BRUSH BROOM FINISH (STANDARD CONCRETE DRIVEWAY) |
| CP-2B | BANDING: SWEPT BRUSH W/ MEDIUM ROCK SALT (STANDARD CONCRETE DRIVEWAY) |
| CP-5 | BANDING: PRECAST CONCRETE PAVER (RUNNING BOND PATTERN PERPENDICULAR TO BANDING) |

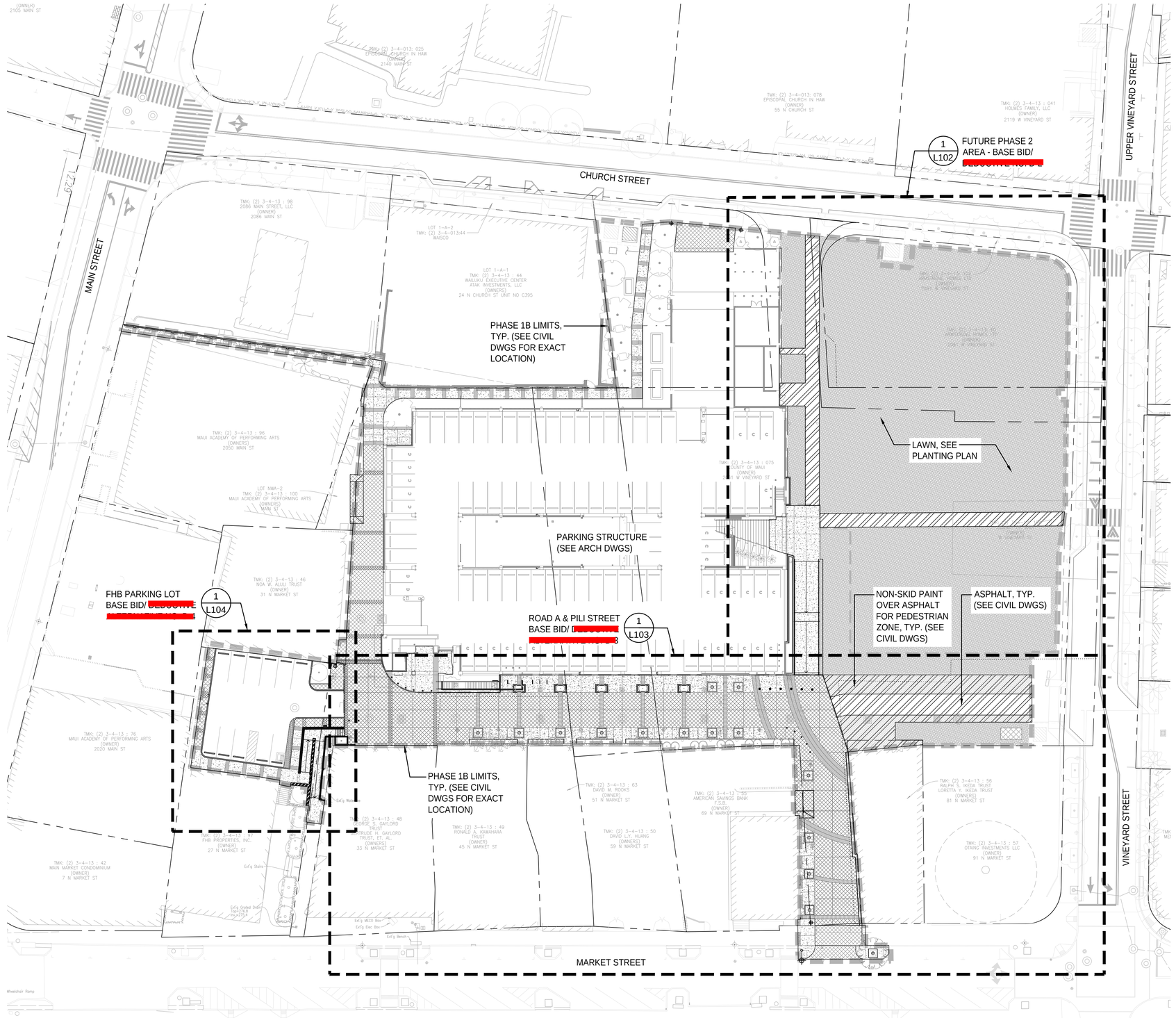


1 OVERALL HARDSCAPE PLAN - BASE BID

SCALE: 1" = 30'-0"

NORTH 0 5 15 30 60 FEET

FERRARO CHOI

FERRARO CHOI AND ASSOCIATES LTD
ARCHITECTURE / INTERIOR ARCHITECTURE / RESEARCH
733 BISHOP ST. SUITE 2620 HONOLULU HI 96813-4016
TEL 808 533 8880 FAX 808 599 3769 www.ferrarochoi.com

STANLEY DUNCAN LICENSED PROFESSIONAL LANDSCAPE ARCHITECT No. 5815 HAWAII U.S.A.

SIGNATURE: R. Stanley Duncan EXPIRATION OF LICENSE: April 30, 2020

THIS WORK WAS PREPARED BY ME OR UNDER MY SUPERVISION AND CONSTRUCTION OF THIS PROJECT WILL BE OBSERVED BY ME OR UNDER MY SUPERVISION. (HRS 464-4 AND COMMERCE AND CONSUMER AFFAIRS)

# WAILUKU CIVIC COMPLEX PHASE 1B

100% FINAL DESIGN

NOT FOR CONSTRUCTION

SHEET TITLE: OVERALL HARDSCAPE PLAN & NOTES - BASE BID

REVISIONS:

CADD FILE:

PROJECT: 2017-001

DRAWN: PBR

DATE: 7/25/2019

PHASE 1B

SHEET L100 OF SHEETS

COPYRIGHT PROTECTED: THIS WORK IS PROTECTED UNDER THE 1990 ARCHITECTURAL WORKS COPYRIGHT PROTECTION ACT

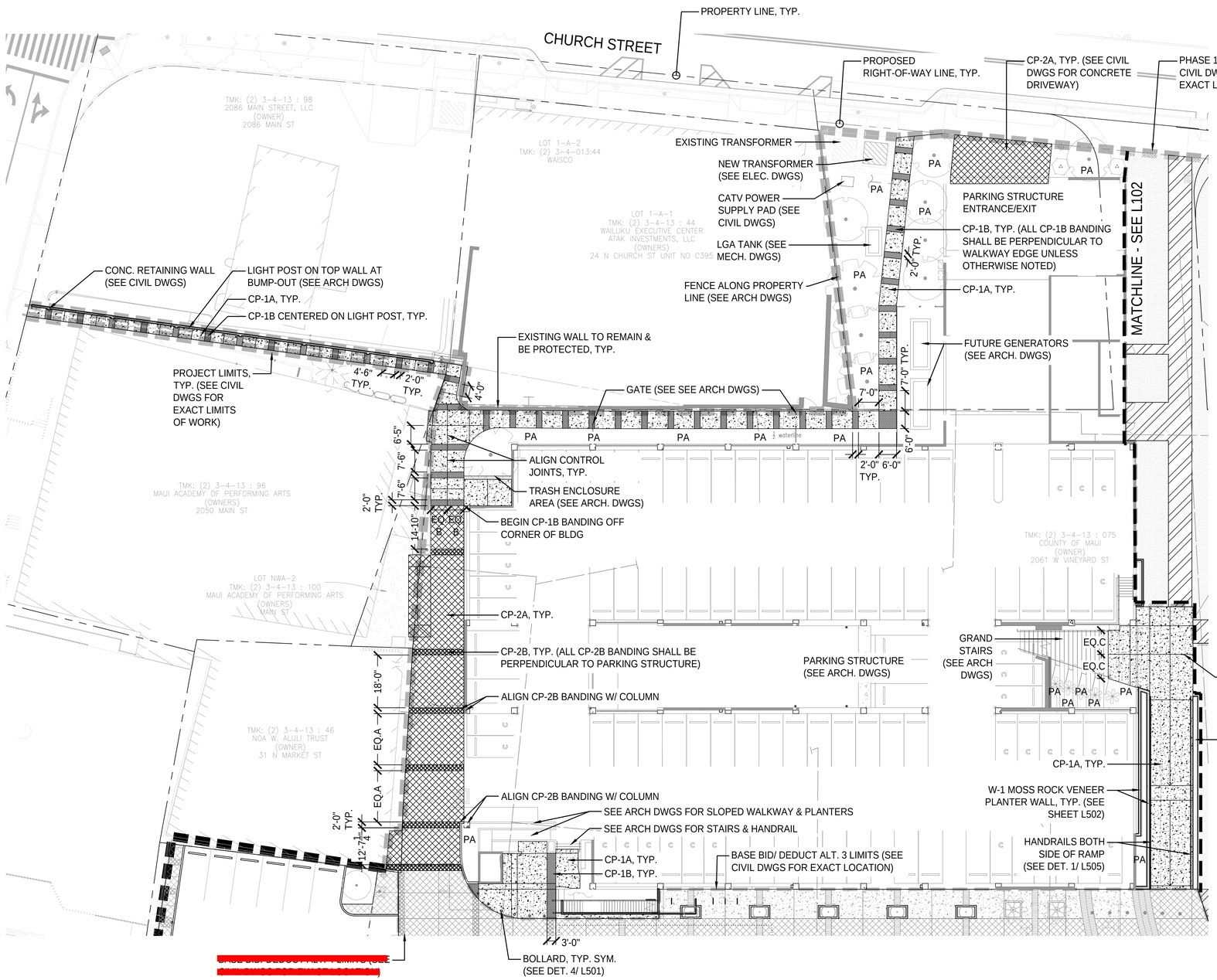


1 HARDSCAPE PLAN - BASE BID

SCALE: 1" = 20'-0"

NORTH 0 5 10 20 40 FEET

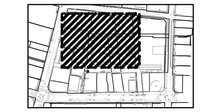

KEY MAP

HARDSCAPE FINISHES LEGEND

| | |
|---|---|
| CP-1A | MEDIUM BRUSH BROOM FINISH (STANDARD CONCRETE WALKWAY) |
| CP-1B | BANDING: SWEPT BRUSH W/ MEDIUM ROCK SALT (STANDARD CONCRETE WALKWAY) |
| CP-2A | MEDIUM BRUSH BROOM FINISH (STANDARD CONCRETE DRIVEWAY) |
| CP-2B | BANDING: SWEPT BRUSH W/ MEDIUM ROCK SALT (STANDARD CONCRETE DRIVEWAY) |

NOTES:

1. PA = PLANTING AREA
2. REFER TO HARDSCAPE NOTES ON L100; REFER TO HARDSCAPE FINISHES SCHEDULE & SITE FURNISHINGS SCHEDULE ON L001 & L002.
3. REFER TO CIVIL DRAWINGS FOR GRADING, UTILITIES, LAYOUT, & PAVING DETAILS.

FERRARO CHOI
FERRARO CHOI AND ASSOCIATES LTD
ARCHITECTURE / INTERIOR ARCHITECTURE / RESEARCH
733 BISHOP ST. SUITE 2620 HONOLULU HI 96813-4016
TEL 808 533 8880 FAX 808 599 3769 www.ferrarochoi.com

STANLEY DUNCAN LICENSED PROFESSIONAL LANDSCAPE ARCHITECT No. 5815 HAWAII U.S.A.

EXPIRATION DATE OF LICENSE: 4/30/2021

SIGNATURE

THIS WORK WAS PREPARED BY ME, OR UNDER MY SUPERVISION AND CONSTRUCTION CR. THIS PROJECT WILL BE ADMINISTERED UNDER THE STATE OF HAWAII DEPARTMENT OF COMMERCE AND CONSUMER AFFAIRS

# WAILUKU CIVIC COMPLEX PHASE 1B

100% FINAL DESIGN

NOT FOR CONSTRUCTION

SHEET TITLE: HARDSCAPE PLAN - (BASE BID)

CADD FILE:

REVISIONS:

PROJECT: 2017-001

DRAWN: PBR

DATE: 7/25/2019

PHASE 1B

SHEET L101

OF SHEETS

COPYRIGHT PROTECTED: THIS WORK IS PROTECTED UNDER THE 1990 ARCHITECTURAL WORKS COPYRIGHT PROTECTION ACT

NOTES:

1. PA = PLANTING AREA
2. REFER TO HARDSCAPE NOTES ON L100; REFER TO HARDSCAPE FINISHES SCHEDULE & SITE FURNISHINGS SCHEDULE ON L001 & L002.
3. REFER TO CIVIL DRAWINGS FOR GRADING, UTILITIES, LAYOUT, & PAVING DETAILS.

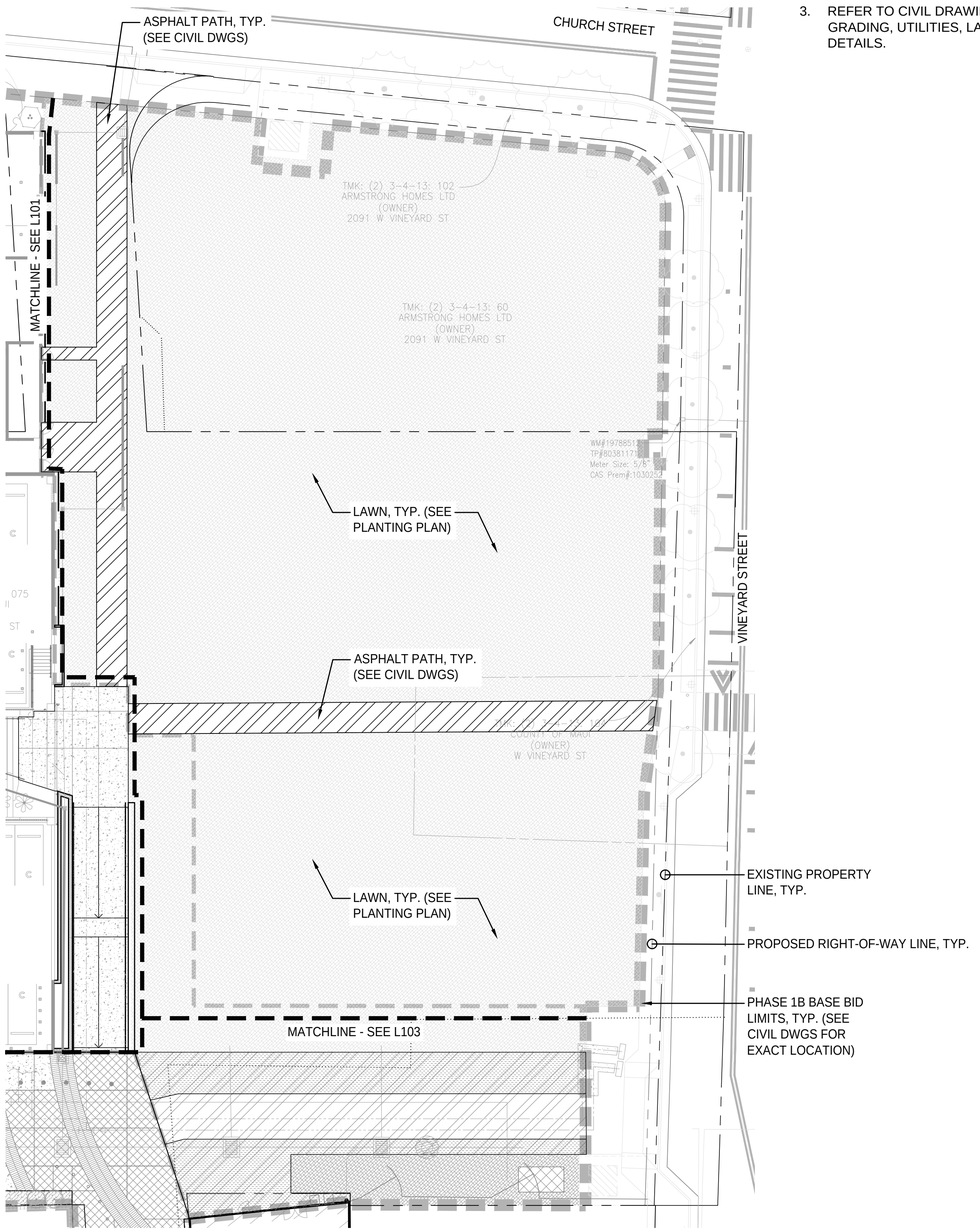


1 HARDSCAPE PLAN - FUTURE PHASE 2 AREA BASE BID

SCALE: 1" = 20'-0"

NORTH 0 5 10 20 40 FEET

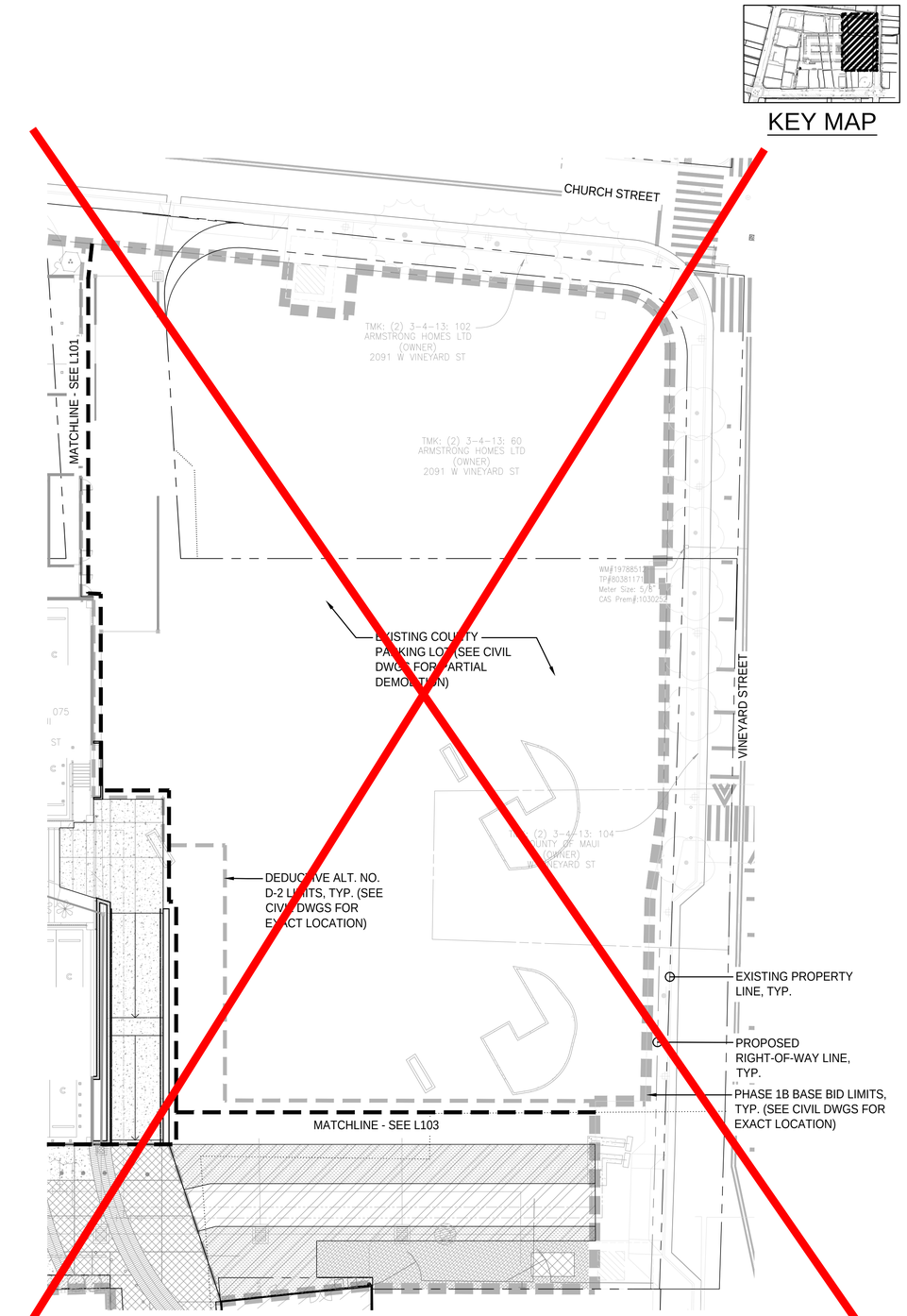


2 ~~HARDSCAPE PLAN - FUTURE PHASE 2 AREA DEDUCTIVE ALT. NO. D-2~~

SCALE: 1" = 20'-0"

NORTH 0 5 10 20 40 FEET


FERRARO CHOI

FERRARO CHOI AND ASSOCIATES LTD
ARCHITECTURE / INTERIOR ARCHITECTURE / RESEARCH
733 BISHOP ST. SUITE 2620 HONOLULU HI 96813-4016
TEL 808 533 8880 FAX 808 599 3769 www.ferrarochoi.com


STANLEY DUNCAN LICENSED PROFESSIONAL LANDSCAPE ARCHITECT No. 5815 HAWAII U.S.A.

EXPIRATION DATE OF LICENSE: 2020

SIGNATURE

THIS WORK WAS PREPARED BY ME, OR UNDER MY SUPERVISION AND CONSTRUCTION OF THIS PROJECT WILL BE SUPERVISED BY ME OR UNDER MY SUPERVISION. (HRS 464-1 AS AMENDED BY HB 2490 HD1 SD1 CD1 COMMERCE AND CONSUMER AFFAIRS)

# WAILUKU CIVIC COMPLEX PHASE 1B

100% FINAL DESIGN

NOT FOR CONSTRUCTION

SHEET TITLE: HARDSCAPE PLANS - BASE BID/ ~~DEDUCTIVE ALT. NO. D-2~~

CADD FILE:

REVISIONS:

| | |
|---|---|
| PROJECT: | 2017-001 |
| DRAWN: | PBR |
| DATE: | 7/25/2019 |
| PHASE | 1B |
| SHEET | L102 |
| OF | SHEETS |


COPYRIGHT PROTECTED: THIS WORK IS PROTECTED UNDER THE 1990 ARCHITECTURAL WORKS COPYRIGHT PROTECTION ACT

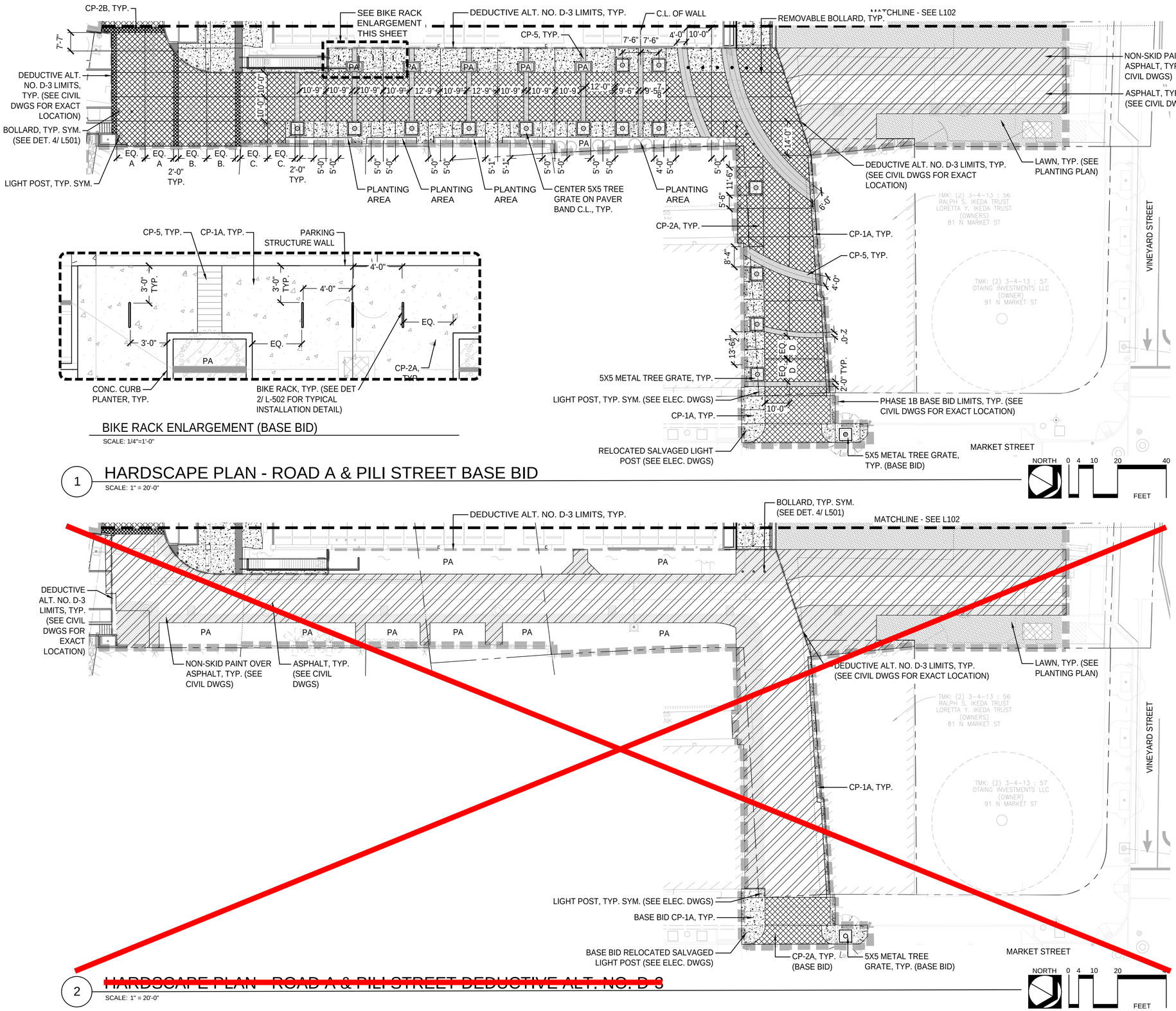


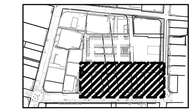

KEY MAP

HARDSCAPE FINISHES LEGEND

| | |
|---|---|
| CP-1A | MEDIUM BRUSH BROOM FINISH (STANDARD CONCRETE WALKWAY) |
| CP-1B | BANDING: SWEPT BRUSH W/ MEDIUM ROCK SALT (STANDARD CONCRETE WALKWAY) |
| CP-2A | MEDIUM BRUSH BROOM FINISH (STANDARD CONCRETE DRIVEWAY) |
| CP-2B | BANDING: SWEPT BRUSH W/ MEDIUM ROCK SALT (STANDARD CONCRETE DRIVEWAY) |
| CP-5 | PRECAST CONCRETE PAVER (RUNNING BOND PATTERN PERPENDICULAR TO BANDING) |

NOTES:

1. PA = PLANTING AREA
2. REFER TO HARDSCAPE NOTES ON L100; REFER TO HARDSCAPE FINISHES SCHEDULE & SITE FURNISHINGS SCHEDULE ON L001 & L002.
3. REFER TO CIVIL DRAWINGS FOR GRADING, UTILITIES, LAYOUT, & PAVING DETAILS.

FERRARO CHOI
FERRARO CHOI AND ASSOCIATES LTD
ARCHITECTURE / INTERIOR ARCHITECTURE / RESEARCH
733 BISHOP ST. SUITE 2620 HONOLULU HI 96813-4016
TEL 808 533 8880 FAX 808 599 3769 www.ferrarochoi.com

STANLEY DUNCAN LICENSED PROFESSIONAL LANDSCAPE ARCHITECT No. 5815 HAWAII U.S.A.
EXPIRATION OF LICENSE: APRIL 30, 2020
SIGNATURE
THIS WORK WAS PREPARED BY ME, OR UNDER MY SUPERVISION AND CONSTRUCTION OF THIS PROJECT WILL BE SUPERVISED BY ME OR UNDER MY SUPERVISION. (HRS 464-1 AND 464-4 AS AMENDED BY HAWAII DEPARTMENT OF COMMERCE AND CONSUMER AFFAIRS)

# WAILUKU CIVIC COMPLEX PHASE 1B

100% FINAL DESIGN
NOT FOR CONSTRUCTION

SHEET TITLE: HARDSCAPE PLANS - BASE BID/ ~~DEDUCTIVE ALT. NO. D-3~~

REVISIONS:

| | |
|---|---|
| PROJECT: | 2017-001 |
| DRAWN: | PBR |
| DATE: | 7/25/2019 |
| PHASE | 1B |
| SHEET | L103 |
| OF | SHEETS |
| CADD FILE: | |

COPYRIGHT PROTECTED: THIS WORK IS PROTECTED UNDER THE 1990 ARCHITECTURAL WORKS COPYRIGHT PROTECTION ACT

BASE BID WALL FINISHES LEGEND

W-3 — PAINTED CAST-IN-PLACE LOW CONCRETE RETAINING WALL (SEE STRUCTURAL DWGS. FOR WALL DETAIL, SEE ARCH. DWGS FOR PAINT & FINISH SPECS)

W-5 — MOSS ROCK WALL TO MATCH EXISTING ROCK PLANTER WALL AT FIRST HAWAIIAN BANK (USE SALVAGED ROCKS FROM DEMOLITION IF POSSIBLE), SEE SHEET L502 FOR MOSS ROCK VENEER DETAILS

HARDSCAPE FINISHES LEGEND

CP-1A — MEDIUM BRUSH BROOM FINISH (STANDARD CONCRETE WALKWAY)

CP-1B — BANDING: SWEPT BRUSH W/ MEDIUM ROCK SALT (STANDARD CONCRETE WALKWAY)

CP-2A — MEDIUM BRUSH BROOM FINISH (STANDARD CONCRETE DRIVEWAY)

CP-2B — BANDING: SWEPT BRUSH W/ MEDIUM ROCK SALT (STANDARD CONCRETE DRIVEWAY)

NOTES:

1. PA = PLANTING AREA
2. REFER TO HARDSCAPE NOTES ON L100; REFER TO HARDSCAPE FINISHES SCHEDULE & SITE FURNISHINGS SCHEDULE ON L001 & L002.
3. REFER TO CIVIL DRAWINGS FOR GRADING, UTILITIES, LAYOUT, & PAVING DETAILS.

KEY MAP

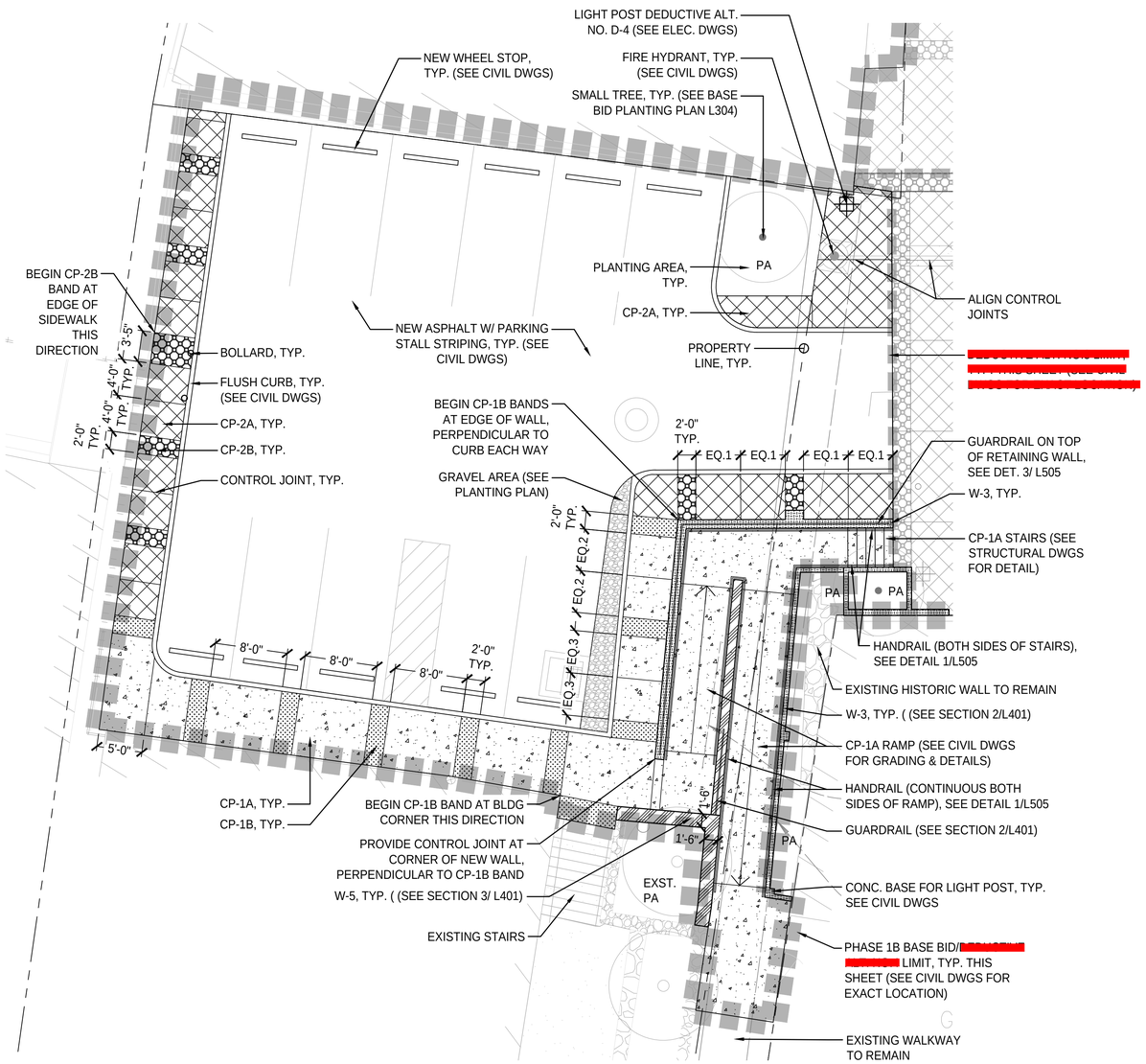


1 HARDSCAPE PLAN - BASE BID FHB PARKING LOT

SCALE: 1/8" = 1'-0"

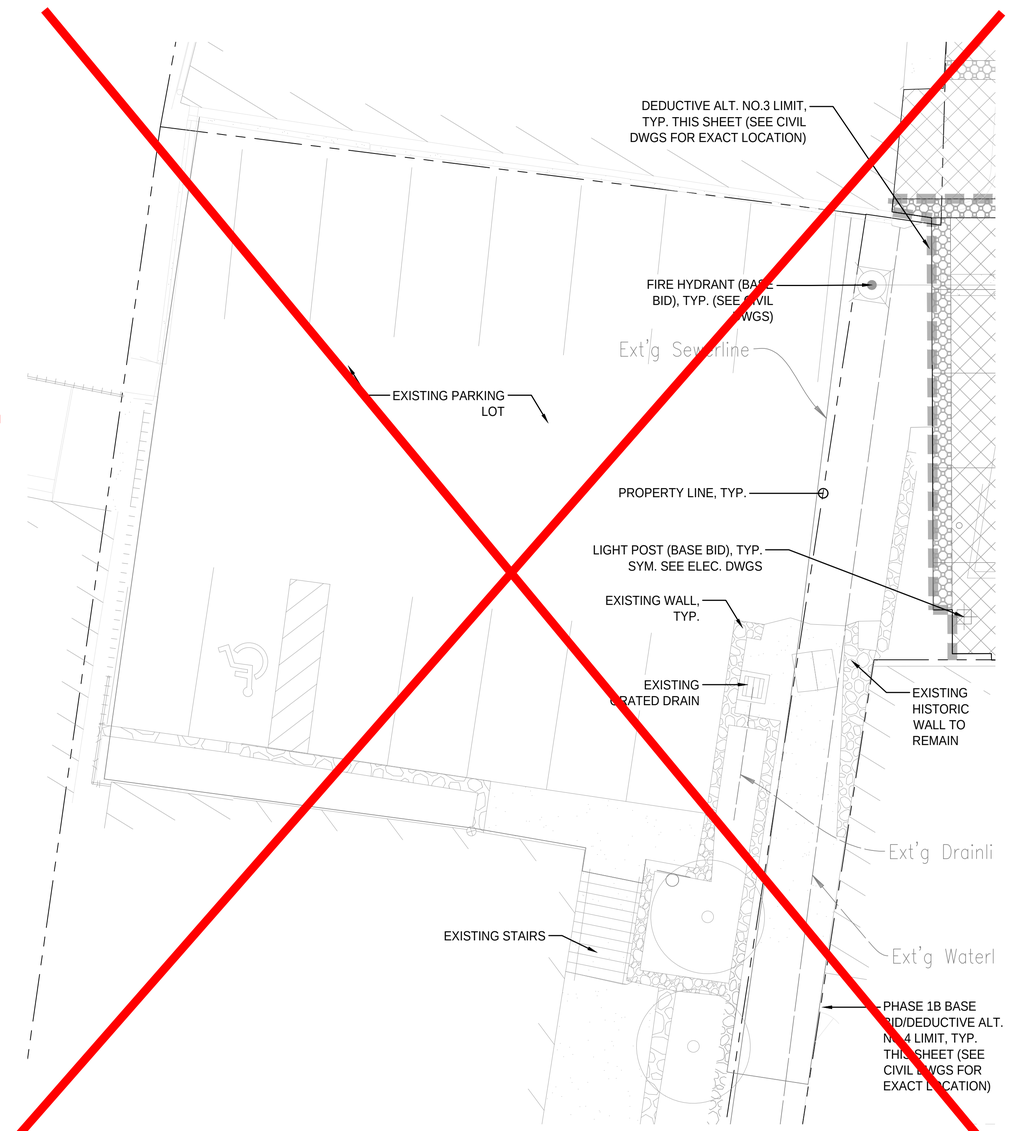


2 ~~DEDUCTIVE ALT. NO. D-4 FHB PARKING LOT~~

SCALE: 1/8" = 1'-0"

NORTH 0 2 4 8 16 FEET


FERRARO CHOI

FERRARO CHOI AND ASSOCIATES LTD
ARCHITECTURE / INTERIOR ARCHITECTURE / RESEARCH
733 BISHOP ST. SUITE 2620 HONOLULU HI 96813-4016
TEL 808 533 8880 FAX 808 599 3769 www.ferrarochoi.com


R. STANLEY DUNCAN — LICENSED PROFESSIONAL LANDSCAPE ARCHITECT — No. 5815 — HAWAII — U.S.A.

SIGNATURE: R. Stanley Duncan — EXPIRATION DATE OF LICENSE: 4/30/2020

THIS WORK WAS PREPARED BY ME, OR UNDER MY SUPERVISION AND CONSTRUCTION OF THIS PROJECT WILL BE SUPERVISED BY ME OR UNDER MY SUPERVISION. (HRS 464-1 AND 464-4 AS AMENDED BY HB 2490 CD1 SD1 HD1 TO BE EFFECTIVE JULY 1, 1998

# IRRIGATION GENERAL NOTES

1. THIS PLAN IS DIAGRAMMATIC. IRRIGATION SYSTEM IS SUBJECT TO FIELD ADJUSTMENTS DUE TO UNANTICIPATED SITE CONDITIONS. LOCATE ALL MAINLINES, LATERALS, VALVES AND SPRINKLER HEADS WITHIN PLANTING AREAS, UNLESS OTHERWISE NOTED. PLACE MAINLINE IN PLANTING AREAS WHERE NO SLEEVES ARE SHOWN. AVOID ANY CONFLICT BETWEEN UNDERGROUND UTILITIES, STRUCTURES AND PLANTINGS. THE CONTRACTOR SHALL BE RESPONSIBLE FOR LOCATING AND PROTECTING ALL EXISTING UTILITIES. BURY PRESSURE MAINLINES 24" DEEP MINIMUM FOR DECODER-BASED WIRING, AND LATERAL LINES 12" DEEP MINIMUM.

2. CONTRACTOR SHALL INSTALL ALL IRRIGATION EQUIPMENT (IE. IRRIGATION LINES, CONTROL WIRES, VALVES, HEADS, ETC.) PER SPECIFICATIONS. EXISTING GATE VALVES, POINT OF CONNECTION, ETC. ARE DERIVED FROM THE BEST AVAILABLE INFORMATION AND ON-SITE INSPECTION. THE CONTRACTOR SHALL VERIFY THOSE POINTS OF CONNECTION NOTED AND REPORT ANY DISCREPANCIES TO THE OWNER'S REPRESENTATIVE.

3. THE IRRIGATION SYSTEM WAS DESIGNED TO PERFORM WITH A STATIC PRESSURE OF 80 PSI AND WATER DEMAND OF 24 GPM (LARGEST SEPARATE CIRCUIT OF THE IRRIGATION SYSTEM) FROM THE PHASE 1B POINT OF CONNECTION (P.O.C.) ON SITE AT CHURCH STREET. THE CONTRACTOR SHALL BE RESPONSIBLE FOR VERIFYING THESE REQUIREMENTS THROUGH ONSITE TESTING AND SHALL REPORT THE FINDINGS TO THE (OWNER REPRESENTATIVES) AT LEAST THIRTY (30) DAYS PRIOR TO START OF CONSTRUCTION. SEE PHASE 1A CIVIL DRAWINGS FOR IRRIGATION WATER METER.

4. CONTRACTOR SHALL SECURE ALL NECESSARY PERMITS AND OBSERVE ALL LOCAL CODES AND REGULATIONS. THE CONTRACTOR SHALL CONFIRM ALL SITES DIMENSIONS AND CONDITIONS, AND REPORT ANY DISCREPANCIES TO THE OWNER'S REPRESENTATIVE.

5. CONTRACTOR SHALL COORDINATE THE INSTALLATION OF ALL SLEEVES, CONDUITS, MAINLINES AND LATERALS UNDER PAVEMENT AND THROUGH WALLS. CONTRACTOR SHALL ENSURE THAT THESE ITEMS ARE LAID PRIOR TO PLACEMENT OF PAVEMENT OR WALL STRUCTURES.

6. LOCATE AND INSTALL ALL AREA DRIP LINE 2" FROM SIDEWALKS, CURBS, DRIVEWAYS, BUILDING AND WALL UNLESS OTHERWISE NOTED, AND 4" FROM PLANTED AREA. OPERATE ONLY ONE VALVE AT A TIME PER CONTROLLER, UNLESS OTHERWISE NOTED.

7. CONTRACTOR SHALL ADJUST ALL DRIPLINE TUBING AS REQUIRED TO ACCOMMODATE ANY VERTICAL OBSTRUCTIONS THAT MAY OCCUR, INCLUDING BUT NOT LIMITED TO LIGHT POLES, FIRE HYDRANTS, TREES, ETC. VERIFY ALL HEAD LAYOUT WITH THE OWNER'S REPRESENTATIVE PRIOR TO COMMENCING WORK.

8. WITHIN 30 DAYS AFTER AWARD OF THE CONTRACT, SUBMIT FOR THE OWNER'S REPRESENTATIVE'S ACCEPTANCE SIX (6) COPIES OF DETAILED SCALED DRAWINGS AND WIRING DIAGRAMS FOR PERMANENT AND TEMPORARY IRRIGATION SYSTEMS. NOT PROPOSED DEVIATIONS FROM THE CONTRACT. INCLUDE SAMPLES OF MATERIALS, IF REQUIRED BY CONTRACT.

9. PERFORM HYDROSTATIC TEST BY APPLYING CONTINUOUS STATIC PRESSURE OF 60 PSI FOR ONE (1) HOUR. NOTIFY THE OWNER'S REPRESENTATIVE AT LEAST THREE (3) DAYS IN ADVANCE OF TEST. REPAIR LEAKS THAT DEVELOP AND REPEAT TEST. DO NOT BACKFILL UNTIL THERE IS NO FURTHER SIGN OF LEAKAGE.

10. PERFORM OPERABILITY TEST BY OPENING REMOTE CONTROL VALVE AND TEST CIRCUITS FOR LEAKS AROUND BARBED AND THREADED PVC FITTINGS. REPAIR LEAKS AND REPEAT TESTS. NOTIFY THE OWNER'S REPRESENTATIVE AT LEAST THREE (3) DAYS IN ADVANCE OF TEST. DO NOT BACKFILL UNTIL THERE IS NO FURTHER SIGN OF LEAKAGE.

11. PERFORM COVERAGE TEST. BEFORE PLANTING PERIOD, RUN AUTOMATIC CONTROLLER THROUGH ALL IT'S CYCLES. CHECK WATERING FOR COVERAGES AND UNIFORMITY IN COMPANY OF THE OWNER'S REPRESENTATIVE. RUN SYSTEM UNTIL THERE ARE PUDDLES OR THERE IS SHEET FLOW TO DETERMINE INITIAL IRRIGATION TIME AND NUMBER OF CYCLES PER WEEK NEEDED TO WATER REQUIREMENTS OF PLANTS.

12. IF PLANS DO NOT SPECIFY DEPTH OF EXCAVATION, PROVIDE MINIMUM COVER TO FINISH GRADE AS FOLLOWS:

    a. 24 INCHES FOR IRRIGATION MAIN WITH CONVENTIONAL WIRING; 24" FOR IRRIGATION MAINLINE W/DECODER-BASED WIRING.
    b. 12 INCHES FOR IRRIGATION LATERAL
    c. 24 INCHES FOR SLEEVE OR CONDUIT UNDER LANDSCAPE PAVEMENT.
    d. 36 INCHES FOR SLEEVE OR CONDUIT UNDER ROADWAY PAVEMENT.
    e. FOR CONTROLLER WIRES AND CONDUITS IN UNPAVED AREAS, DEPTH EQUAL TO THAT OF PRESSURE IRRIGATION PIPE.

14. AFTER INSTALLATION OF IRRIGATION, LANDSCAPE CONTRACTOR TO PROVIDE MARK-UP INFORMATION OF ANY CHANGES MADE IN THE FIELD TO THE FINAL DESIGN PLANS. PROVIDE THREE (3) REPRODUCIBLE COPIES DOCUMENTING THESE 'AS-BUILT' CONDITIONS TO THE OWNER'S REPRESENTATIVE UPON COMPLETION OF IRRIGATION INSTALLATION WORK OR THIRTY (30) DAYS BEFORE FINAL INSPECTION, WHICHEVER IS SOONER.

*(INCLUDE DOCUMENTATION OF TEST RESULTS, STATIC & WORKING PRESSURE, GPM, ETC.)

# TEMPORARY IRRIGATION NOTES

1. CONTRACTOR SHALL PROVIDE TEMPORARY IRRIGATION SYSTEM, TO BE APPROVED BY OWNER'S REPRESENTATIVE.
2. CONTRACTOR TO PROVIDE WATERING SCHEDULE.
3. PIPE SLEEVE AND CONDUITS SHALL ALLOW FOR IRRIGATION PIPING AND CONTROL WIRING AND THEIR RELATED COUPLINGS TO EASILY SLIDE THROUGH SLEEVE MATERIAL.
4. EXTEND SLEEVE 18" BEYOND EDGES OF PAVING OR CONSTRUCTED HARDSCAPE.
5. MARK SLEEVE AND CONDUIT LOCATIONS ON SIDES OF PAVING OR WITH IRRIGATION FLAGS IN PLANTING AREA.
6. VERIFY ALL SLEEVE AND CONDUIT LOCATIONS WITH OWNER PRIOR TO CONSTRUCTION OF PAVING.
7. CONTRACTOR SHALL PROVIDE SHOP DRAWINGS FOR TEMPORARY IRRIGATION DESIGN AND PROPOSED EQUIPMENT TO BE USED FOR ACCEPTANCE PRIOR TO INSTALLATION.
8. CONTRACTOR SHALL COORDINATE INSTALLATION OF ALL SLEEVES AND CONDUITS UNDER PAVEMENT AND THROUGH WALLS. CONTRACTOR SHALL ASSURE THAT THESE ITEMS ARE LAID PRIOR TO PLACEMENT OF PAVEMENT OR WALL STRUCTURES.

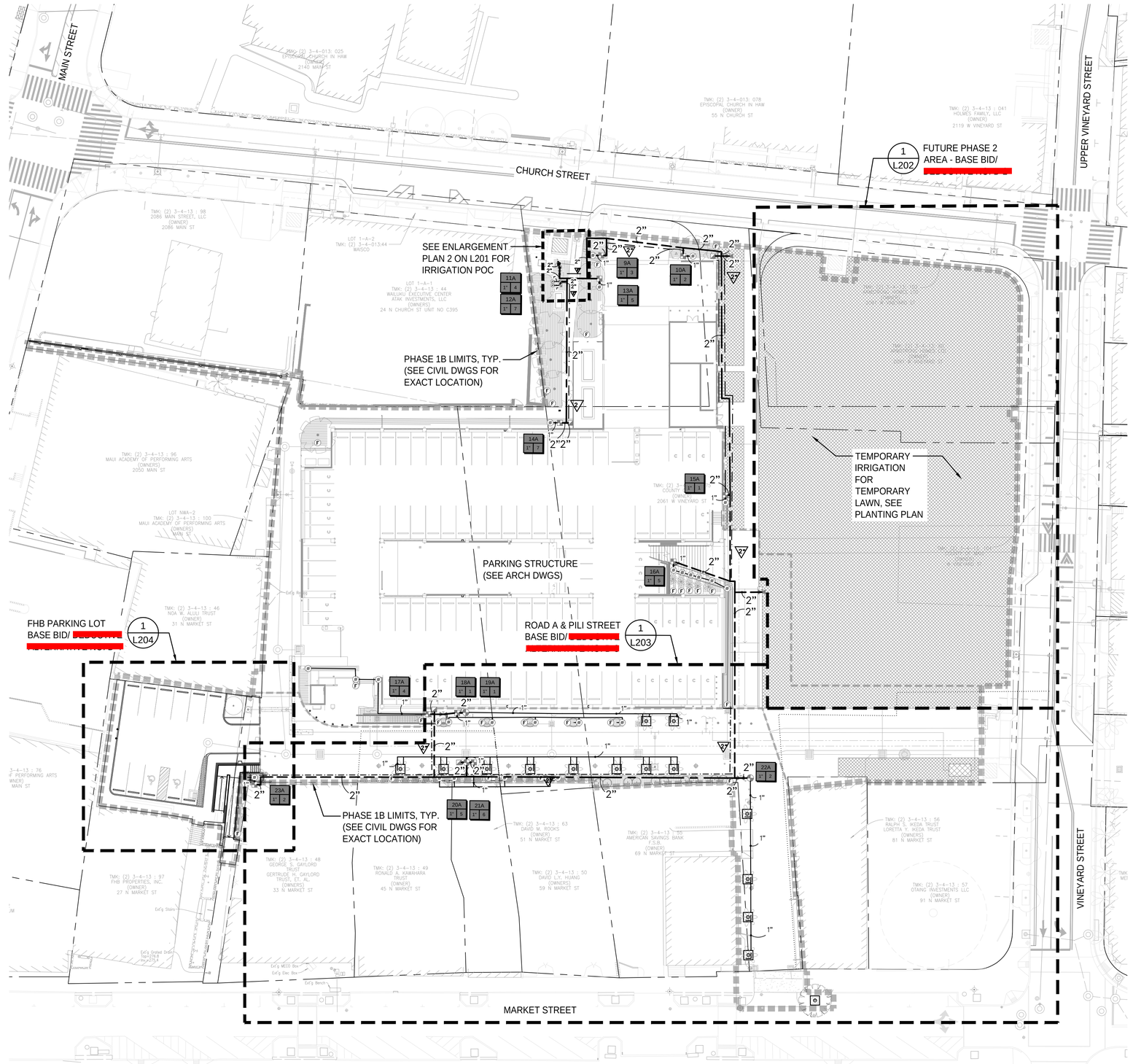


1 OVERALL IRRIGATION PLAN - BASE BID

SCALE: 1" = 30'-0"

NORTH 0 5 15 30 60 FEET

FERRARO CHOI

FERRARO CHOI AND ASSOCIATES LTD
ARCHITECTURE / INTERIOR ARCHITECTURE / RESEARCH
733 BISHOP ST. SUITE 2620 HONOLULU HI 96813-4016
TEL 808 533 8880 FAX 808 599 3769 www.ferrarochoi.com

R. STANLEY DUNCAN ★ LICENSED PROFESSIONAL LANDSCAPE ARCHITECT No. 5815 ★ HAWAII U.S.A.

EXPIRATION OF LICENSE: 4/30/2020

SIGNATURE

THIS WORK WAS PREPARED BY ME OR UNDER MY SUPERVISION AND CONSTRUCTION OF THIS PROJECT WILL BE SUPERVISED BY ME OR UNDER MY SUPERVISION. (HRS 464-1 AND HAR 16-115-3 DEPARTMENT OF COMMERCE AND CONSUMER AFFAIRS)

WAILUKU CIVIC COMPLEX PHASE 1B

100% FINAL DESIGN

NOT FOR CONSTRUCTION

SHEET TITLE: OVERALL IRRIGATION PLAN & NOTES - BASE BID

CADD FILE:

REVISIONS:

PROJECT: 2017-001

DRAWN: PBR

DATE: 7/25/2019

PHASE 1B

SHEET L200

OF SHEETS

COPYRIGHT PROTECTED: THIS WORK IS PROTECTED UNDER THE 1990 ARCHITECTURAL WORKS COPYRIGHT PROTECTION ACT

NOTE:
1. REFER TO L200 FOR GENERAL IRRIGATION NOTES & TO L220 FOR IRRIGATION SCHEDULE.

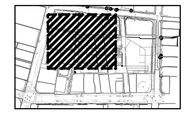

KEY MAP

FLOW STATION LEGEND

VALVE CALLOUT
- # — VALVE NUMBER
- #" — VALVE FLOW
- # — VALVE SIZE

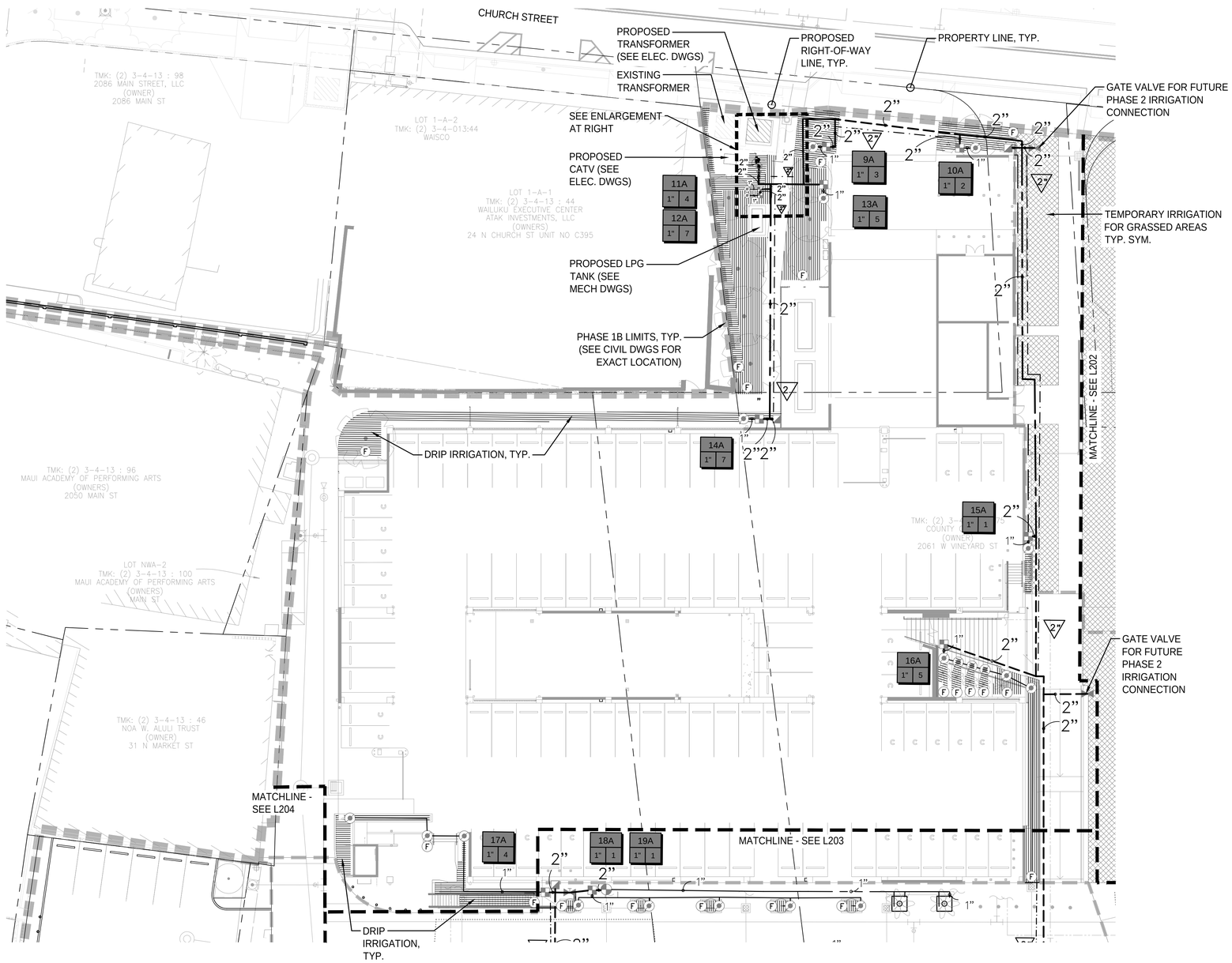


1 IRRIGATION PLAN - BASE BID
SCALE: 1" = 20'-0"

NORTH 0 5 10 20 40 FEET

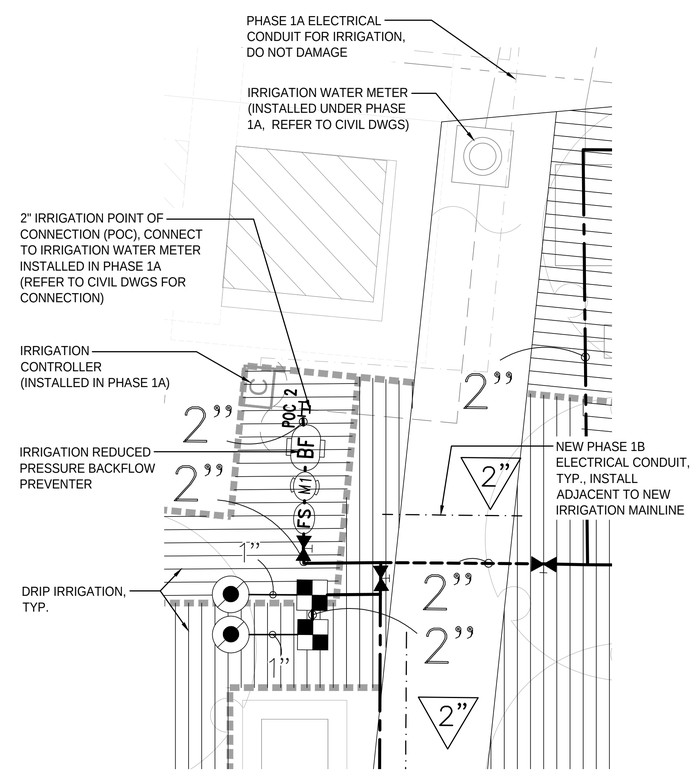


2 IRRIGATION POC ENLARGEMENT
SCALE: 1/4" = 1'-0"


FERRARO CHOI
FERRARO CHOI AND ASSOCIATES LTD
ARCHITECTURE / INTERIOR ARCHITECTURE / RESEARCH
733 BISHOP ST. SUITE 2620 HONOLULU HI 96813-4016
TEL 808 533 8880 FAX 808 599 3769 www.ferrarochoi.com


STANLEY DUNCAN ★ LICENSED PROFESSIONAL LANDSCAPE ARCHITECT No. 5815 ★ HAWAII U.S.A.

EXPIRATION DATE OF LICENSE: 4/30/2021

SIGNATURE

THIS WORK WAS PREPARED BY ME, OR UNDER MY SUPERVISION AND CONSTRUCTION OF THIS PROJECT WILL BE SUPERVISED BY ME OR UNDER MY SUPERVISION (HRS CHAPTER 464, COMMERCE AND CONSUMER AFFAIRS)

# WAILUKU CIVIC COMPLEX PHASE 1B

100% FINAL DESIGN
NOT FOR CONSTRUCTION

SHEET TITLE: IRRIGATION PLAN - BASE BID

CADD FILE:

REVISIONS:

| | |
|---|---|
| PROJECT: | 2017-001 |
| DRAWN: | PBR |
| DATE: | 7/25/2019 |
| PHASE | 1B |
| SHEET | L201 |
| OF | SHEETS |


COPYRIGHT PROTECTED: THIS WORK IS PROTECTED UNDER THE 1990 ARCHITECTURAL WORKS COPYRIGHT PROTECTION ACT

FLOW STATION LEGEND

VALVE CALLOUT

VALVE NUMBER

VALVE FLOW

VALVE SIZE

NOTE:

1. REFER TO L200 FOR GENERAL IRRIGATION NOTES & TO L220 FOR IRRIGATION SCHEDULE.

KEY MAP

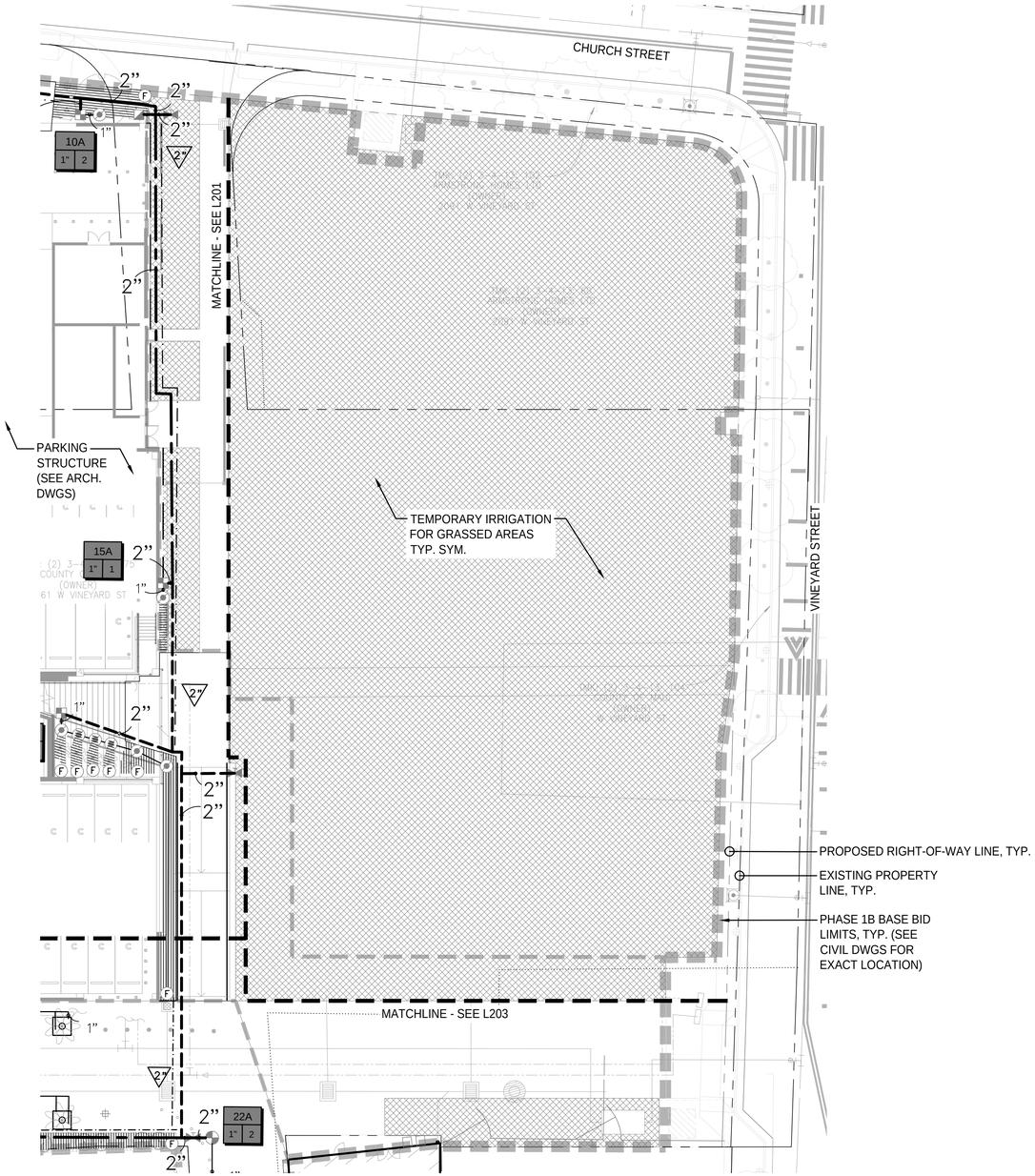


1 IRRIGATION PLAN - FUTURE PHASE 2 AREA BASE BID

SCALE: 1" = 20'-0"

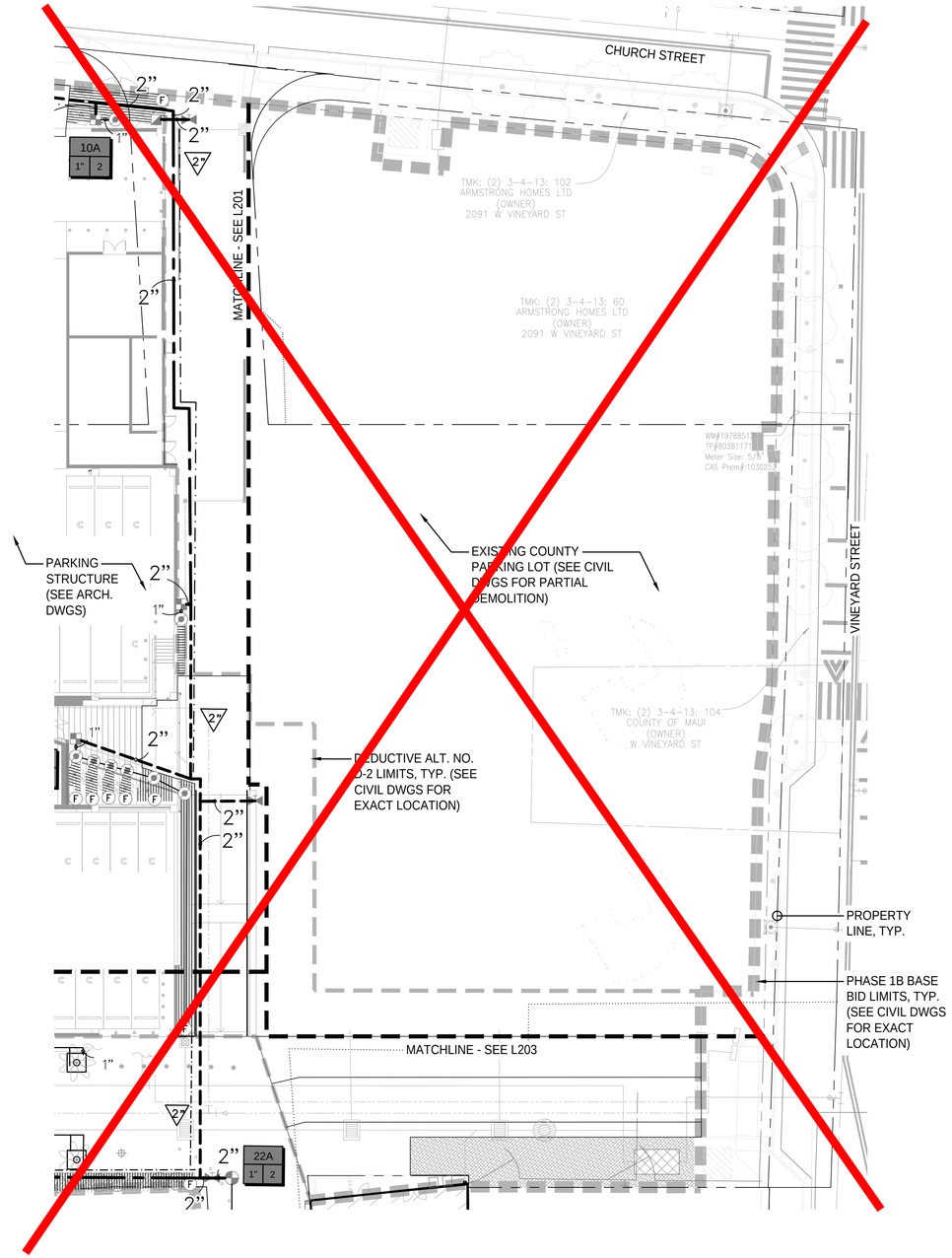


2 ~~IRRIGATION PLAN - FUTURE PHASE 2 AREA DEDUCTIVE ALT. NO. D-2~~

SCALE: 1" = 20'-0"

NORTH 0 4 10 20 40 FEET


FERRARO CHOI

FERRARO CHOI AND ASSOCIATES LTD
ARCHITECTURE / INTERIOR ARCHITECTURE / RESEARCH
733 BISHOP ST. SUITE 2620 HONOLULU HI 96813-4016
TEL 808 533 8880 FAX 808 599 3769 www.ferrarochoi.com


STANLEY DUNCAN LICENSED PROFESSIONAL LANDSCAPE ARCHITECT No. 5815 HAWAII U.S.A.

EXPIRATION DATE OF LICENSE: 2020

SIGNATURE

THIS WORK WAS PREPARED BY ME, OR UNDER MY SUPERVISION AND CONSTRUCTION OF THIS PROJECT WILL BE SUPERVISED BY ME OR UNDER MY SUPERVISION. (HRS CHAPTER 464, COMMERCE AND CONSUMER AFFAIRS)

# WAILUKU CIVIC COMPLEX PHASE 1B

100% FINAL DESIGN

NOT FOR CONSTRUCTION

SHEET TITLE: IRRIGATION PLANS - BASE BID/ ~~DEDUCTIVE ALT. NO. D-2~~

REVISIONS: △ △ △ △ △

CADD FILE:

PROJECT: 2017-001

DRAWN: PBR

DATE: 7/25/2019

PHASE 1B

SHEET L202 OF SHEETS


COPYRIGHT PROTECTED: THIS WORK IS PROTECTED UNDER THE 1990 ARCHITECTURAL WORKS COPYRIGHT PROTECTION ACT

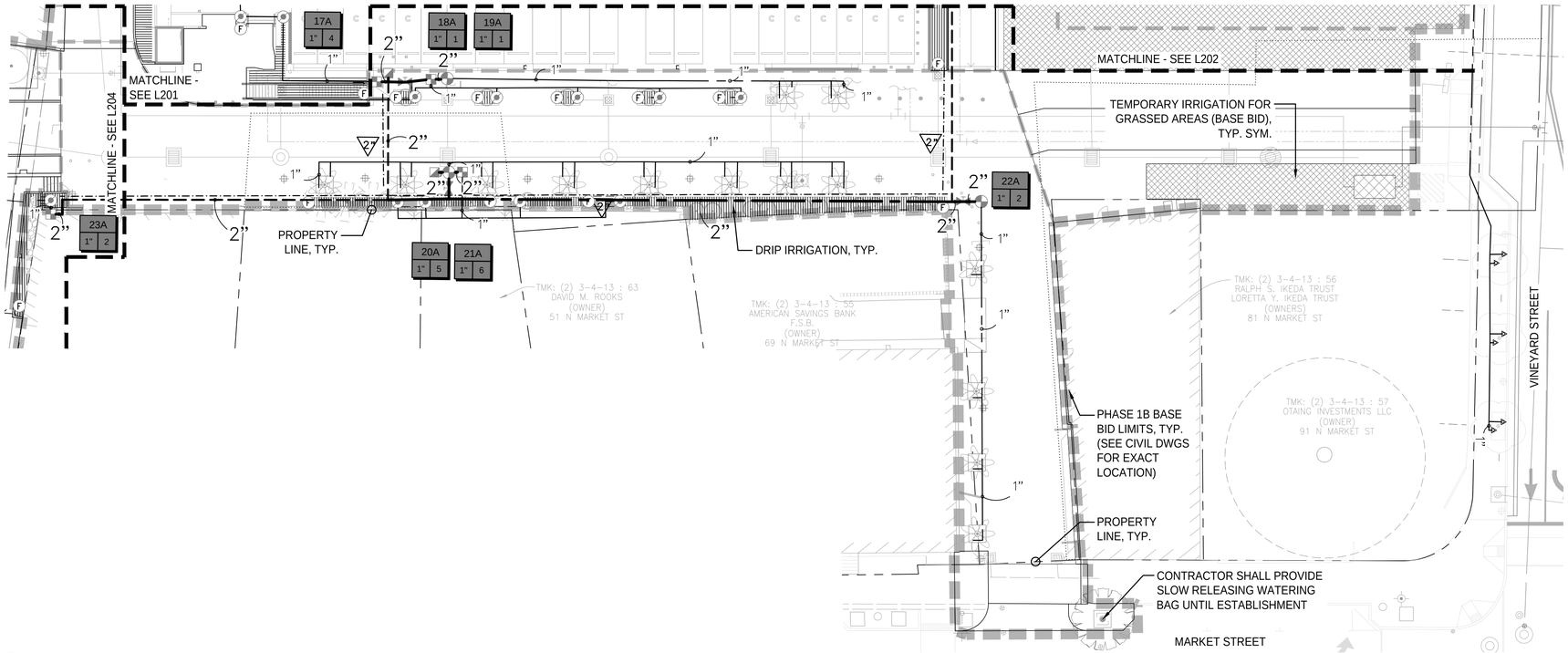


1 IRRIGATION PLAN - ROAD A & PILI STREET BASE BID

SCALE: 1" = 20'-0"

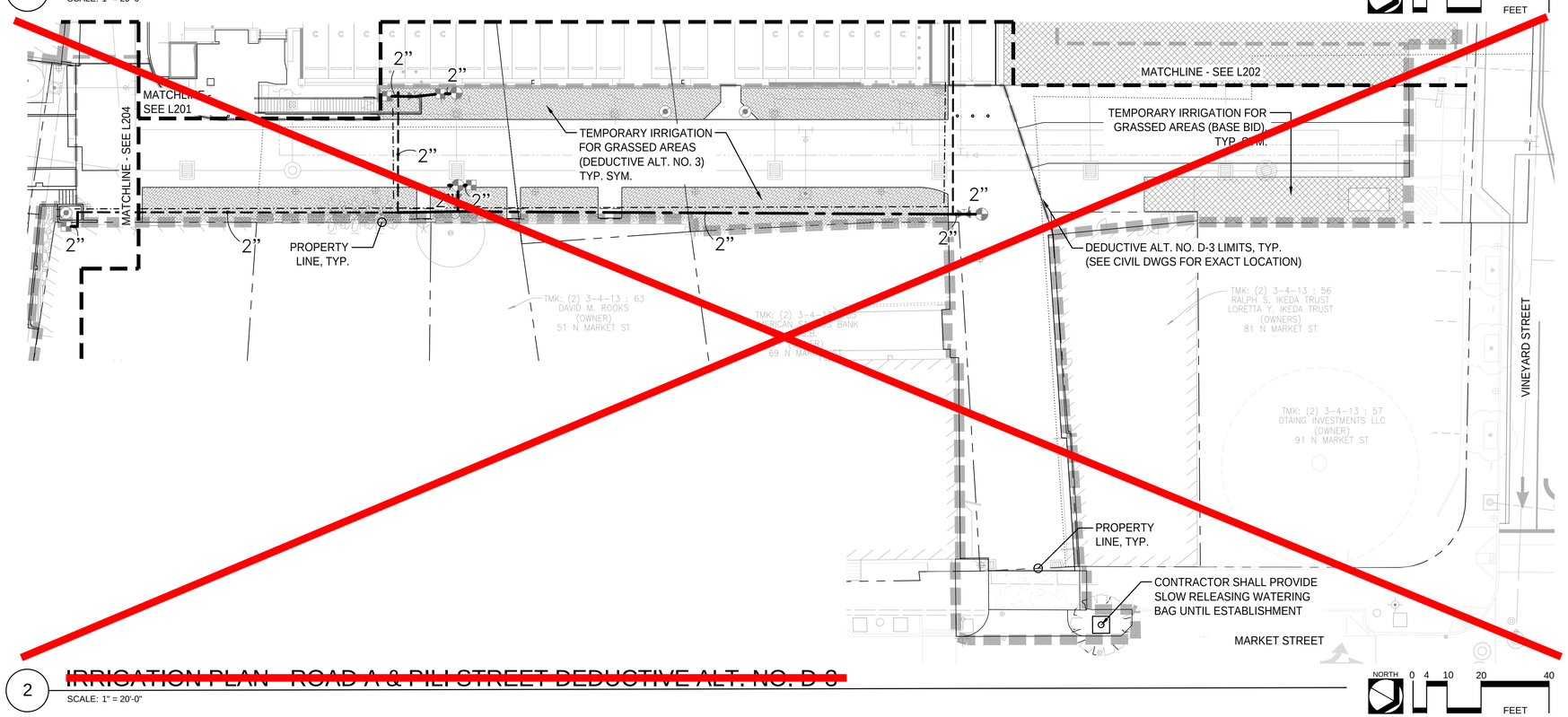


2 ~~IRRIGATION PLAN - ROAD A & PILI STREET DEDUCTIVE ALT. NO. D-3~~

SCALE: 1" = 20'-0"

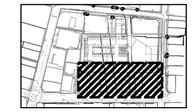

KEY MAP

NOTE:

1. REFER TO L200 FOR GENERAL IRRIGATION NOTES & TO L220 FOR IRRIGATION SCHEDULE.

FLOW STATION LEGEND

VALVE CALLOUT

- # — VALVE NUMBER
- #" # — VALVE FLOW, VALVE SIZE


FERRARO CHOI AND ASSOCIATES LTD
ARCHITECTURE / INTERIOR ARCHITECTURE / RESEARCH
733 BISHOP ST. SUITE 2620 HONOLULU HI 96813-4016
TEL 808 533 8880 FAX 808 599 3769 www.ferrarochoi.com


STANLEY DUNCAN ★ LICENSED PROFESSIONAL LANDSCAPE ARCHITECT No. 5815 ★ U.S.A. HAWAII

SIGNATURE

EXPIRATION OF LICENSE

THIS WORK WAS PREPARED BY ME, OR UNDER MY SUPERVISION AND CONSTRUCTION OF THIS PROJECT WILL BE SUPERVISED BY ME (HRS 464-1 AND HAR 16-115 DEPARTMENT OF COMMERCE AND CONSUMER AFFAIRS)

# WAILUKU CIVIC COMPLEX PHASE 1B

100% FINAL DESIGN

NOT FOR CONSTRUCTION

SHEET TITLE: IRRIGATION PLANS - BASE BID/ ~~DEDUCTIVE ALT. NO. D-3~~

REVISIONS:

PROJECT: 2017-001

DRAWN: PBR

DATE: 7/25/2019

PHASE 1B

SHEET L203

OF SHEETS

CADD FILE:


COPYRIGHT PROTECTED: THIS WORK IS PROTECTED UNDER THE 1990 ARCHITECTURAL WORKS COPYRIGHT PROTECTION ACT

NOTE:
1. REFER TO L200 FOR GENERAL IRRIGATION NOTES & TO L320 FOR IRRIGATION SCHEDULE.

KEY MAP

FLOW STATION LEGEND

VALVE CALLOUT

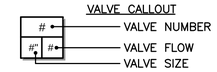


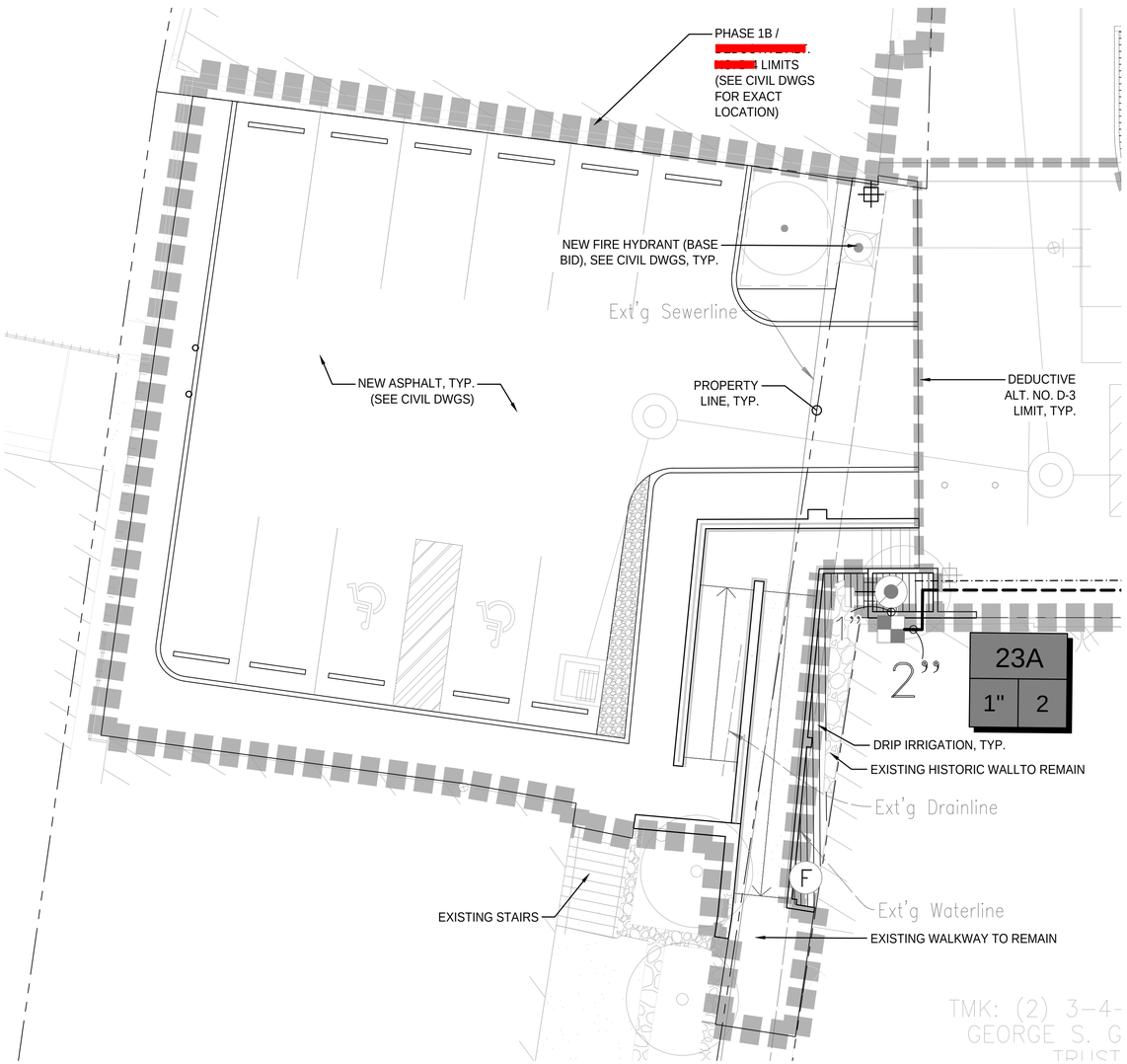


1 IRRIGATION PLAN - BASE BID FHB PARKING LOT

SCALE: 1/8" = 1'-0"

2 ~~DEDUCTIVE ALT. NO. D-4 FHB PARKING LOT~~

SCALE: 1/8" = 1'-0"

NORTH 0 2 4 8 16 FEET


FERRARO CHOI
FERRARO CHOI AND ASSOCIATES LTD
ARCHITECTURE / INTERIOR ARCHITECTURE / RESEARCH
733 BISHOP ST. SUITE 2620 HONOLULU HI 96813-4016
TEL 808 533 8880 FAX 808 599 3769 www.ferrarochoi.com


R. STANLEY DUNCAN
LICENSED PROFESSIONAL LANDSCAPE ARCHITECT
No. 5815
HAWAII U.S.A.

SIGNATURE: R. Stanley Duncan
EXPIRATION OF LICENSE: 4/30/2021

THIS WORK WAS PREPARED BY ME OR UNDER MY SUPERVISION AND CONSTRUCTION CR. THIS PROJECT WILL BE REVIEWED BY DEPT. OF COMMERCE AND CONSUMER AFFAIRS

# WAILUKU CIVIC COMPLEX PHASE 1B

100% FINAL DESIGN

NOT FOR CONSTRUCTION

SHEET TITLE: IRRIGATION PLANS - BASE BID/ ~~DEDUCTIVE ALT. NO. D-4~~

CADD FILE:

REVISIONS:

PROJECT: 2017-001

DRAWN: PBR

DATE: 7/25/2019

PHASE 1B

SHEET L204

OF SHEETS


COPYRIGHT PROTECTED: THIS WORK IS PROTECTED UNDER THE 1990 ARCHITECTURAL WORKS COPYRIGHT PROTECTION ACT

## IRRIGATION SCHEDULE

| SYMBOL | MANUFACTURER/MODEL/DESCRIPTION | ARC | PSI | GPM | RADIUS |
|---|---|---|---|---|---|
| | RAIN BIRD RWS–M–B–C MINI ROOT WATERING SYSTEM WITH 4.0" DIAMETER X 18.0" LONG WITH LOCKING GRATE, SEMI–RIGID MESH TUBE AND RAIN BIRD 1401 0.25 GPM OR 1402 0.5 GPM BUBBLER AS INDICATED. WITH CHECK VALVE. | 360 | 30 | 0.25 | 2' |

| SYMBOL | MANUFACTURER/MODEL/DESCRIPTION |
|---|---|
| | RAIN BIRD XCZ–100–PRB–COM WIDE FLOW DRIP CONTROL KIT FOR COMMERCIAL APPLICATIONS. 1" BALL VALVE WITH 1" PESB VALVE AND 1" PRESSURE REGULATING 40PSI QUICK–CHECK BASKET FILTER. 0.3GPM TO 20GPM. |
| | PIPE TRANSITION POINT ABOVE GRADE PIPE TRANSITION POINT FROM PVC LATERAL TO DRIP TUBING WITH RISER TO ABOVE GRADE INSTALLATION. |
| F | FLUSH VALVE 3/4" PVC BALL VALVE IN 10" VALVE BOX. |
| | AREA TO RECEIVE DRIPLINE RAIN BIRD XFS–CV–06–12 XFS–CV ON–SURFACE LANDSCAPE DRIPLINE WITH A HEAVY–DUTY 4.3 PSI CHECK VALVE. 0.6 GPH EMITTERS AT 12" O.C. DRIPLINE LATERALS SPACED AT 12" APART, WITH EMITTERS OFFSET FOR TRIANGULAR PATTERN. GREAT FOR ELEVATION CHANGE. SPECIFY XF INSERT FITTINGS AND QF PRE–FABRICATED HEADER/EXHAUST. |

| SYMBOL | MANUFACTURER/MODEL/DESCRIPTION |
|---|---|
| | RAIN BIRD PESB–PRS–D 1", 1–1/2", 2" PLASTIC INDUSTRIAL VALVES. LOW FLOW OPERATING CAPABILITY, GLOBE CONFIGURATION. WITH PRESSURE REGULATING MODULE, AND SCRUBBER TECHNOLOGY FOR RELIABLE PERFORMANCE IN DIRTY WATER IRRIGATION APPLICATIONS. |
| | RAIN BIRD 44–LRC 1" BRASS QUICK–COUPLING VALVE, WITH CORROSION–RESISTANT STAINLESS STEEL SPRING, LOCKING THERMOPLASTIC RUBBER COVER, AND 2–PIECE BODY. |
| | NIBCO T–113 CLASS 125 BRONZE GATE SHUT OFF VALVE WITH WHEEL HANDLE, SAME SIZE AS MAINLINE PIPE DIAMETER AT VALVE LOCATION. SIZE RANGE – 1/4" – 3" |
| M1 | GRISWOLD 2160HE 1" 1" SOLENOID, NORMALLY OPEN MASTER VALVE. EPOXY COATING. CAST IRON AND BRONZE MATERIAL. NPT END CONNECTION. |
| BF | FEBCO LF825YA 1–1/2" REDUCED PRESSURE BACKFLOW PREVENTER (LEAD–FREE) |
| FS | RAIN BIRD FS–100–B 1" FLOW SENSOR FOR USE WITH RAIN BIRD MAXICOM, SITECONTROL, AND ESP–LXD CENTRAL CONTROL SYSTEMS. BRASS MODEL. SUGGESTED OPERATING RANGE OF 2.0 GPM TO 40.0 GPM. SENSORS SHOULD BE SIZED FOR FLOW RATHER THAN PIPE SIZE. |
| POC 2 | POINT OF CONNECTION 2" |

## IRRIGATION SCHEDULE

| SYMBOL | MANUFACTURER/MODEL/DESCRIPTION | ARC | PSI | GPM | RADIUS |
|---|---|---|---|---|---|
| | IRRIGATION LATERAL LINE: PVC CLASS 200 SDR 21 | | | | |
| | IRRIGATION LATERAL LINE: HDPE PE4710 DR 11 | | | | |
| | IRRIGATION MAINLINE: TYPE K COPPER PIPE | | | | |
| | IRRIGATION MAINLINE: PVC SCHEDULE 40 | | | | |
| | PIPE SLEEVE: PVC SCHEDULE 80 TYPICAL PIPE SLEEVE FOR IRRIGATION PIPE. PIPE SLEEVE SIZE SHALL ALLOW FOR IRRIGATION PIPING AND THEIR RELATED COUPLINGS TO EASILY SLIDE THROUGH SLEEVING MATERIAL. EXTEND SLEEVES 18 INCHES BEYOND EDGES OF PAVING OR CONSTRUCTION. | | | | |
| | CONTROL WIRE CONDUIT: PVC SCHEDULE 80 UL APPROVED TYPICAL CONDUIT FOR IRRIGATION CONTROL WIRE. CONDUIT SIZE SHALL ALLOW FOR IRRIGATION CONTROL WIRE TO EASILY SLIDE THROUGH CONDUIT MATERIAL. EXTEND SLEEVES 18 INCHES BEYOND EDGES OF PAVING OR CONSTRUCTION. | | | | |

| VALVE CALLOUT | CONDUIT & SLEEVE CALLOUT |
|---|---|
| # — VALVE NUMBER | 2" — CONDUIT SIZE |
| #" # — VALVE FLOW | 6" — SLEEVE SIZE |
| VALVE SIZE | |


FERRARO CHOI

FERRARO CHOI AND ASSOCIATES LTD
ARCHITECTURE / INTERIOR ARCHITECTURE / RESEARCH
733 BISHOP ST. SUITE 2620 HONOLULU HI 96813-4016
TEL 808 533 8880 FAX 808 599 3769 www.ferrarochoi.com


R. STANLEY DUNCAN
LICENSED PROFESSIONAL LANDSCAPE ARCHITECT
No. 5815
HAWAII U.S.A.

SIGNATURE: R. Stanley Duncan
EXPIRATION DATE OF LICENSE: 4/30/2020

THIS WORK WAS PREPARED BY ME, OR UNDER MY SUPERVISION AND CONSTRUCTION SITE VISITS WILL BE MADE BY ME OR UNDER MY SUPERVISION (HRS 464-1 TO 464-17 AND 16 COMMERCE AND CONSUMER AFFAIRS)

# WAILUKU CIVIC COMPLEX PHASE 1B

100% FINAL DESIGN

NOT FOR CONSTRUCTION

SHEET TITLE: IRRIGATION SCHEDULE

CADD FILE:

REVISIONS:

| | |
|---|---|
| PROJECT: | 2017-001 |
| DRAWN: | PBR |
| DATE: | 7/25/2019 |
| PHASE | 1B |
| SHEET | L220 |
| OF | SHEETS |


COPYRIGHT PROTECTED: THIS WORK IS PROTECTED UNDER THE 1990 ARCHITECTURAL WORKS COPYRIGHT PROTECTION ACT

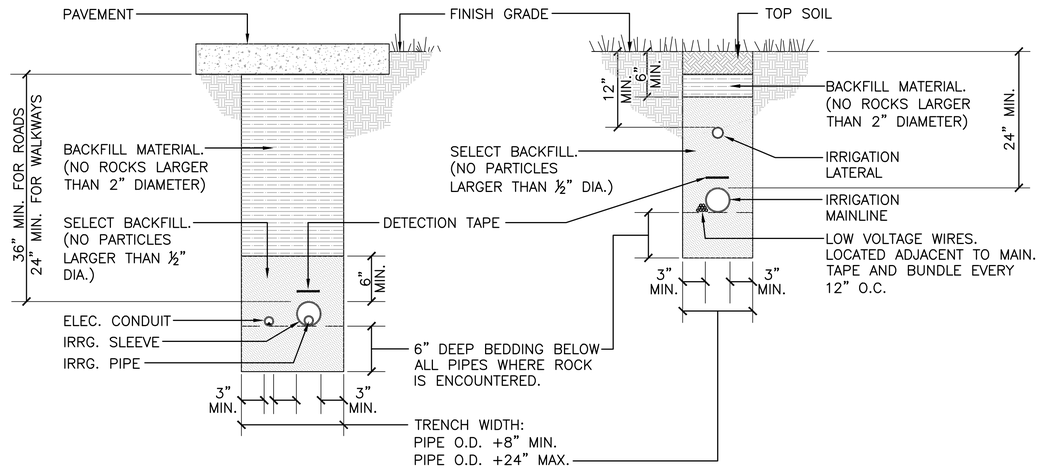


## 1 IRRIGATION TRENCHING DETAIL

1" = 1"

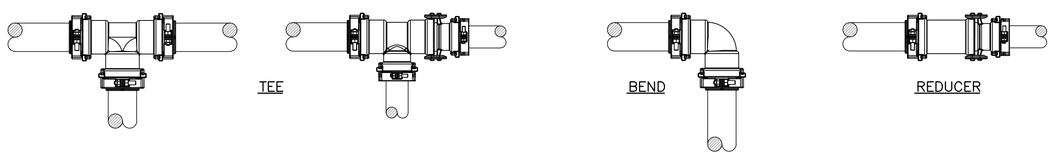


FITTING BELLS 4" AND BELOW: HARCO FITTING TO PIPE RESTRAINT SERIES 60–100–XX OR 82XX10
FITTING BELLS 6" AND ABOVE: HARCO FITTING TO PIPE RESTRAINT SERIES 82XX11

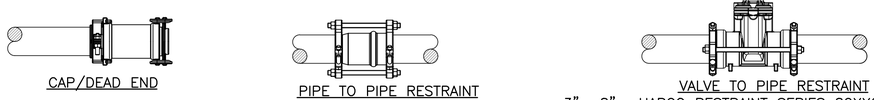


HARCO RESTRAINT SERIES 82XX15

3"– 8": HARCO RESTRAINT SERIES 82XX26
2"– 2½" & 10"– 12": HARCO RESTRAINT SERIES 82XX25

| MINIMUM RESTRAINED LENGTH REQUIREMENTS FOR EACH FITTING/VALVE BELL | | | | | | | |
|---|---|---|---|---|---|---|---|
| – – | 90° BEND | 45°, 22½°, 11¼° BEND | TEE | REDUCER | CAP/DEAD END | VALVE | COUPLING/SERVICE TEE (SEE NOTE 3) |
| 4" & SMALLER | 20' | 20' | 20' | 40' | 60' | 60' | none |
| 6" & LARGER | 40' | 20' | 20' | 60' | 80' | 80' | none |

1. EACH FITTING & VALVE BELL MUST BE RESTRAINED TO THE LENGTH OF PIPE NOTED IN THE TABLE USING FITTING TO PIPE RESTRAINT, VALVE TO PIPE RESTRAINT, AND PIPE TO PIPE RESTRAINT AS REQUIRED.
2. PIPE JOINTS WITHIN THE RESTRAINED LENGTH REQUIREMENT MUST BE RESTRAINED WITH PIPE TO PIPE RESTRAINTS.
3. SERVICE TEES AND COUPLINGS WITHIN THE RESTRAINED LENGTH REQUIREMENT MUST BE RESTRAINED WITH FITTING TO PIPE RESTRAINTS.
4. THE RESTRAINT SCHEMES ARE FOR SYSTEM PRESSURES UP TO 125 PSI. CALL FOR HIGHER SYSTEM PRESSURES ALL FITTING & VALVE BELLS SHALL BE RESTRAINED AS SHOWN

## 2 JOINT RESTRAINT FITTINGS DETAIL

1" = 1'–0"

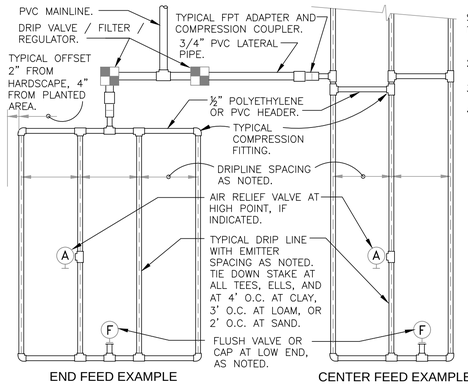


SLOPED CONDITION NOTE:
1. INSTALL AIR RELIEF VALVE AT HIGHEST POINT.
2. SPACING AS NOTED ON TOP ⅔ OF SLOPE.
3. SPACING AT BOTTOM ⅓ AS NOTED PLUS 25%.
4. WHEN ELEVATION CHANGE IS 10 FT OR MORE, ZONE BOTTOM ⅓ SEPARATELY.

| MAXIMUM LATERAL LENGTH (FEET) | | | | | | |
|---|---|---|---|---|---|---|
| | EMITTER FLOW RATE GPH | | | | | |
| | 12" SPACING | | 18" SPACING | | 24" SPACING | |
| PSI | 0.6 | 0.9 | 0.6 | 0.9 | 0.6 | 0.9 |
| 10 | 125 | 96 | 175 | 135 | 218 | 171 |
| 20 | 249 | 191 | 350 | 171 | 442 | 340 |
| 30 | 307 | 236 | 434 | 333 | 550 | 422 |
| 40 | 350 | 268 | 495 | 380 | 627 | 171 |
| 50 | 125 | 96 | 175 | 135 | 218 | 171 |
| 60 | 125 | 96 | 175 | 135 | 218 | 171 |

| GRID PRECIPITATION RATES (IN/HR) | | | |
|---|---|---|---|
| EMITTER SPACING | LATERAL SPACING | EMITTER FLOW RATE | |
| | | 0.6 | 0.9 |
| 12 | 12 | 0.96 | 1.44 |
| 18 | 18 | 0.69 | 1.03 |
| 24 | 24 | 0.28 | 0.41 |

| LATERAL FLOW PER 100 FT (GPM) | | | |
|---|---|---|---|
| EMITTER FLOW | 12" SPACING | 18" SPACING | 24" SPACING |
| 0.6 GPH | 1.0 GPM | 0.67 GPM | 0.50 GPM |
| 0.9 GPH | 1.5 GPM | 1.0 GPM | 0.75 GPM |

| MAXIMUM FLOW PER ZONE | | |
|---|---|---|
| | MAX GPM | PSI LOSS |
| SCHEDULE 40 PVC HEADER SIZE | | |
| 1/2" | 4.7 GPM | 7.7 PSI |
| 3/4" | 8.3 GPM | 5.6 PSI |
| 1" | 13.5 GPM | 4.2 PSI |
| 1–1/2" | 33.9 GPM | 2.9 PSI |
| 2" | 52.4 GPM | 1.9 PSI |
| POLY PIPE HEADER SIZE | | |
| 1/2" | 4.7 GPM | 8.8 PSI |
| 3/4" | 8.3 GPM | 6.3 PSI |
| 1" | 13.5 GPM | 4.8 PSI |
| 1–1/2" | 31.8 GPM | 2.9 PSI |
| 2" | 52.4 GPM | 2.2 PSI |

NOTE:
REFER TO DRIPLINE LAYOUT EXAMPLES BELOW FOR DEFFERENT ACCEPTABLE CONFIGURATIONS.

## 3 TYPICAL DRIPLINE LAYOUT REQUIREMENTS

N.T.S.

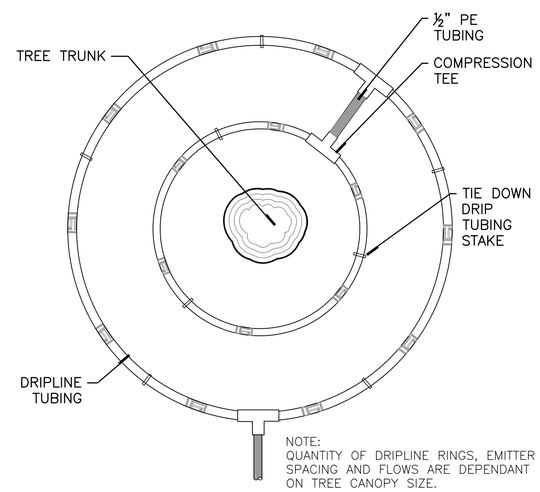


NOTE:
QUANTITY OF DRIPLINE RINGS, EMITTER SPACING AND FLOWS ARE DEPENDANT ON TREE CANOPY SIZE.

## 5 DRIP TUBING AROUND TREES

NOT TO SCALE

FERRARO CHOI
FERRARO CHOI AND ASSOCIATES LTD
ARCHITECTURE / INTERIOR ARCHITECTURE / RESEARCH
733 BISHOP ST. SUITE 2620 HONOLULU HI 96813-4016
TEL 808 533 8880 FAX 808 599 3769 www.ferrarochoi.com

STANLEY DUNCAN ★ LICENSED PROFESSIONAL LANDSCAPE ARCHITECT No. 5815 ★ HAWAII U.S.A.
SIGNATURE
EXPIRATION DATE OF LICENSE
THIS WORK WAS PREPARED BY ME OR UNDER MY SUPERVISION AND CONSTRUCTION OF THIS PROJECT WILL BE INSPECTED BY ME OR UNDER MY SUPERVISION (HRS 464-1 AND 464-4 AS AMENDED)

# WAILUKU CIVIC COMPLEX PHASE 1B

100% FINAL DESIGN
NOT FOR CONSTRUCTION

SHEET TITLE: IRRIGATION DETAILS - 1

CADD FILE:

REVISIONS:

PROJECT: 2017-001
DRAWN: PBR
DATE: 7/25/2019
PHASE 1B
SHEET L230
OF SHEETS

COPYRIGHT PROTECTED: THIS WORK IS PROTECTED UNDER THE 1990 ARCHITECTURAL WORKS COPYRIGHT PROTECTION ACT

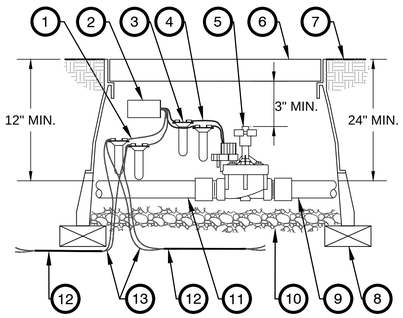


1. WIRE FROM DECODER (1 OF 2)
2. FIELD DECODER
3. DBY WATERPROOF SPLICE
4. SOLENOID WIRE
5. REMOTE CONTROL VALVE
6. PLASTIC VALVE BOX WITH COVER MARKED "IRRIGATION" (FLUSH IN LAWN OR 3" ABOVE IN GROUNDCOVER AREAS)
7. FINISH GRADE
8. SUPPORT BRICK
9. PVC MAINLINE PIPE
10. 3" GRAVEL LAYER WITH FILTER FABRIC BELOW. FIRMLY SECURE TO INSIDE OF VALVE BOX.
11. PVC LATERAL PIPE
12. TWO-WIRE CONTROL CABLE TO NEXT DEVICE (FIELD DECODER, SENSOR DECODER, SURGE PROTECTION DEVICE, OR CONTROLLER). PLACE WIRE BELOW PIPE.
13. COMMUNICATION WIRE TO NEXT DEVICE (FIELD DECODER, SENSOR DECODER, LINE SURGE PROTECTION DEVICE, OR CONTROLLER)

NOTES:
1. SECONDARY WIRE RUN – DISTANCE BETWEEN SOLENOID AND FIELD DECODER – NOT TO EXCEED MANUFACTURER'S MAXIMUM RECOMMENDED DISTANCE WITH RECOMMENDED WIRE SIZE.
2. INCLUDE 3-FEET OF EXTRA WIRE IN EACH VALVE BOX FOR SERVICING.
3. ALL VALVE BOX COVERS SHALL BE LABELED WITH VALVE TYPE, ZONE NUMBER, AND CONTROLLER.

## 1 TYPICAL FIELD DECODER DETAIL

NOT TO SCALE

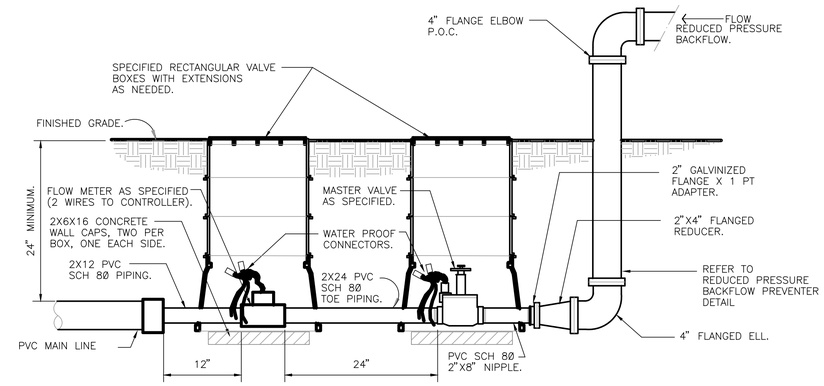


## 4 MASTER CONTROL VALVE AND FLOW SENSOR ASSEMBLY

NOT TO SCALE

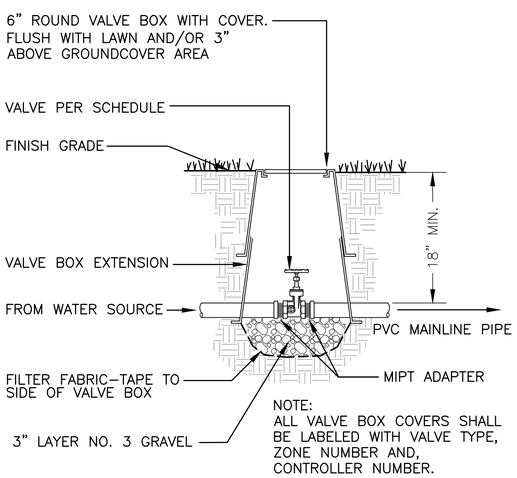


## 2 GATE VALVE

NOT TO SCALE

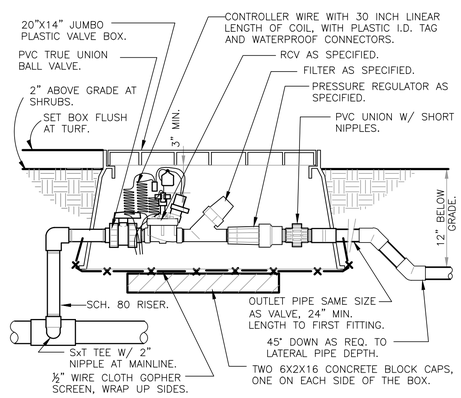


## 3 1" DRIP VALVE/FILTER/REGULATOR

1 1/2" = 1'-0"

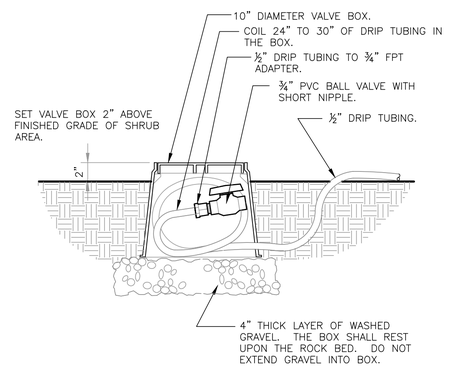


## 5 DRIP FLUSH VALVE

1 1/2" = 1'-0"

NOTE:
1. ALL PIPE AND FITTINGS LESS THAN 4" IN SIZE SHALL BE COPPER. ALL PIPE AND FITTINGS 4" OR GREATER IN SIZE SHALL BE FLANGED DUCTILE IRON.
2. MIN. HEIGHT MUST BE 12" ABOVE HIEGHEST POINT OF DISTRIBUTION, OR THAT SHOWN IN CHART, WHICHEVER IS GREATEST.

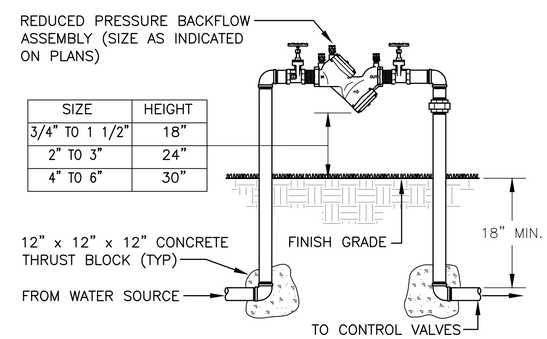


| SIZE | HEIGHT |
|---|---|
| 3/4" TO 1 1/2" | 18" |
| 2" TO 3" | 24" |
| 4" TO 6" | 30" |

## 6 REDUCE PRESSURE BACKFLOW PREVENTER

NOT TO SCALE

FERRARO CHOI
FERRARO CHOI AND ASSOCIATES LTD
ARCHITECTURE / INTERIOR ARCHITECTURE / RESEARCH
733 BISHOP ST. SUITE 2620 HONOLULU HI 96813-4016
TEL 808 533 8880 FAX 808 599 3769 www.ferrarochoi.com

STANLEY DUNCAN LICENSED PROFESSIONAL LANDSCAPE ARCHITECT No. 5815 HAWAII U.S.A.

EXPIRATION OF LICENSE: APRIL 30, 2020

SIGNATURE

THIS WORK WAS PREPARED BY ME OR UNDER MY SUPERVISION AND CONSTRUCTION OF THIS PROJECT WILL BE SUPERVISED BY ME OR UNDER MY SUPERVISION. (HRS 464-1 TO 464-18 COMMERCE AND CONSUMER AFFAIRS)

# WAILUKU CIVIC COMPLEX PHASE 1B

100% FINAL DESIGN
NOT FOR CONSTRUCTION

SHEET TITLE: IRRIGATION DETAILS - 2

CADD FILE:

REVISIONS:

PROJECT: 2017-001
DRAWN: PBR
DATE: 7/25/2019
PHASE 1B
SHEET L231
OF SHEETS

COPYRIGHT PROTECTED: THIS WORK IS PROTECTED UNDER THE 1990 ARCHITECTURAL WORKS COPYRIGHT PROTECTION ACT

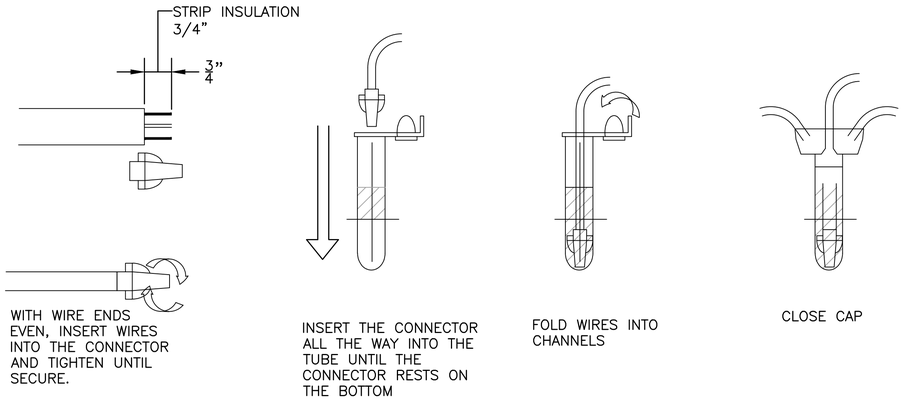


## 1 DBR6 & DBR Y-6 WIRE SPLICE DETAIL

1" = 1"

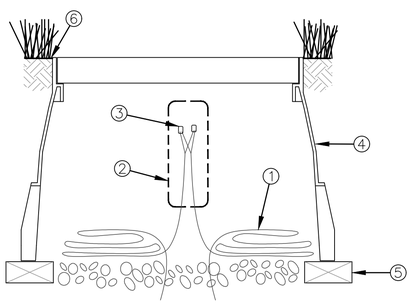


① PE-CABLE (36-INCH LOOP)

② PREFORMED SUPER SERVISEAL WATERPROOF WIRE SPLICE KIT

③ 3M UAL CONNECTIORS (SPLICE ALL WIRE PAIRS)

④ SPLICE BOX WITH COVER

⑤ BRICK (1 OF 2)

⑥ FINISH GRADE

## 2 PE-WIRE SPLICE

NOT TO SCALE

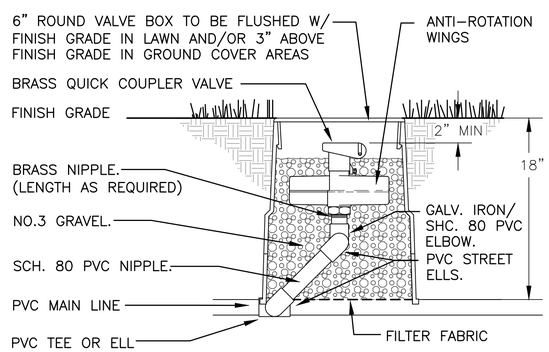


NOTE:
1. KBI OR LASCO SWING JOINTS UPON APPROVAL BY LANDSCAPE ARCHITECT
2. ALL VALVE BOX COVER SHALL BE LABELED WITH VALVE TYPE, ZONE NUMBER AND, CONTROLLER NUMBER.
3. CONTRACTOR SHALL PROVIDE ONE (1) QUICK COUPLER KEY, ONE (1) HOSE ELL & ONE (1) COVER KEY FOR EACH QUICK COUPLER VALVE.

## 3 QUICK COUPLING VALVE

NOT TO SCALE

FERRARO CHOI

FERRARO CHOI AND ASSOCIATES LTD
ARCHITECTURE / INTERIOR ARCHITECTURE / RESEARCH
733 BISHOP ST. SUITE 2620 HONOLULU HI 96813-4016
TEL 808 533 8880 FAX 808 599 3769 www.ferrarochoi.com

R. STANLEY DUNCAN ★ LICENSED PROFESSIONAL LANDSCAPE ARCHITECT No. 5815 ★ HAWAII, U.S.A.

SIGNATURE: R. Stanley Duncan
EXPIRATION DATE OF LICENSE: 4/30/2020

THIS WORK WAS PREPARED BY ME, OR UNDER MY SUPERVISION AND CONSTRUCTION OF THIS PROJECT WILL BE SUPERVISED BY ME OR UNDER MY SUPERVISION. (HRS 464-1 AND 464-4 AS AMENDED BY THE DEPARTMENT OF COMMERCE AND CONSUMER AFFAIRS)

# WAILUKU CIVIC COMPLEX PHASE 1B

100% FINAL DESIGN
NOT FOR CONSTRUCTION

SHEET TITLE: IRRIGATION DETAILS - 3

CADD FILE:

REVISIONS:

PROJECT: 2017-001
DRAWN: PBR
DATE: 7/25/2019
PHASE 1B
SHEET L232
OF SHEETS

COPYRIGHT PROTECTED: THIS WORK IS PROTECTED UNDER THE 1990 ARCHITECTURAL WORKS COPYRIGHT PROTECTION ACT

# PLANTING NOTES:

1. LANDSCAPE CONTRACTOR SHALL FIELD VERIFY ALL PLANT QUANTITIES AND DIMENSIONS PRIOR TO INSTALLATION. QUANTITIES SHOWN ON PLANT LIST AND MATERIAL SCHEDULES ARE FOR REFERENCE ONLY, VERIFY ACTUAL QUANTITIES AS SHOWN ON PLAN. IF THERE IS A DISCREPANCY, THE PLANTING PLAN SHALL TAKE PRECEDENCE.

2. LANDSCAPE CONTRACTOR SHALL BE RESPONSIBLE FOR LOCATING AND PROTECTING EXISTING UTILITIES.

3. PRIOR TO TREE AND SHRUB HOLE EXCAVATION, ALL PLANTING LOCATIONS SHALL BE STAKED OUT BY CONTRACTOR FOR APPROVAL BY OWNER'S REPRESENTATIVE. DO NOT PLANT UNTIL GROUND HAS BEEN PREPARED AND FREE OF STONES GREATER THAN 1/2", DIA., SITE IS NEAT, ORDERLY, AND THE LANDSCAPE ARCHITECT ACCEPTS SITE FOR PLANTING.

4. NOTIFY LANDSCAPE ARCHITECT IN WRITING OF ANY DISCREPANCIES IN PLANT LOCATIONS OR INSUFFICIENT PLANT QUANTITIES DUE TO DIFFERENCE IN PLANS AND ACTUAL FIELD CONDITIONS.

5. NOTIFY LANDSCAPE ARCHITECT 30 DAYS PRIOR TO PLANTING OPERATIONS FOR APPROVAL OF ALL PLANT MATERIAL AT PLACE OF GROWTH. ALL PLANT MATERIAL NOT APPROVED BY THE LANDSCAPE ARCHITECT WILL BE SUBJECT TO REJECTION. THE LANDSCAPE ARCHITECT WILL INSPECT PLANTS AT THE PLACE OF GROWTH AND AFTER THE DELIVERY TO THE PROJECT. EACH TREE SHALL BE TAGGED BY THE LANDSCAPE ARCHITECT. TREES DELIVERED TO THE PROJECT WITHOUT LANDSCAPE ARCHITECT'S TAG WILL BE REJECTED.

6. PLANTS SHALL MEET SIZE INDICATED BY MINIMUM HEIGHT AND SPREAD. PLANTS SHALL BE STRAIGHT AND UNIFORMLY SHAPED, UNLESS UNIQUE OR SPECIAL CHARACTERISTICS ARE SPECIFIED, AND SHALL BE UNDAMAGED, SOUND, HEALTHY, VIGOROUS AND FREE OF DISEASE AND INSECT INFESTATION. PLANTS NOT CONFORMING TO THESE REQUIREMENTS ON DELIVERY TO THE PROJECT AND AT THE END OF THE PLANT ESTABLISHMENT PERIOD WILL BE REJECTED.

7. CONTRACTOR SHALL BE SOLELY RESPONSIBLE FOR THE COMPLETE REMOVAL AND DAMAGES RESULTING FROM PLANTING ANY PLANT SPECIES LISTED ON THE HAWAII DEPARTMENT OF AGRICULTURE 'NOXIOUS WEED RULES' AS DEFINED IN THE STATUTE, HAWAII ADMINISTRATIVE RULES 4:68:1 OR THE 'FEDERAL NOXIOUS WEED LIST' AS DEFINED IN TITLE 7 OF THE CODE OF FEDERAL REGULATIONS (CFR), PARTS 360 AND 361.

8. ALL TREE WORK MUST ADHERE TO AMERICAN NATIONAL STANDARD INSTITUTE (OR ANSI) - A300 TREE CARE STANDARDS AND ANSI-Z133 SAFETY STANDARDS FOR TREE WORK. WORK SHALL BE CONTRACTED TO ARBORISTS THAT HAS BEEN CERTIFIED IN GOOD STANDING AS AN INTERNATIONAL SOCIETY OF ARBORICULTURE (ISA) CERTIFIED ARBORIST FOR AT LEAST 5 YEARS TO ASSURE THAT TREE WORK IS PERFORMED PROPERLY AND TREES ARE NOT DAMAGED BY PRACTICES SUCH AS TOPPING, FLUSH CUTS, OVER-THINNING, OR CLIMBING WITH SPIKES. CONTRACTOR SHALL SUBMIT A COPY OF THE ISA ARBORIST CERTIFICATION OF GOOD STANDING OF 5 YEARS TO THE LANDSCAPE ARCHITECT A MINIMUM OF 7 DAYS PRIOR TO TREE PRUNING.

9. FOR THE DURATION OF CONSTRUCTION WITHIN THE DRIP LINE OF TREES TO REMAIN THERE MUST BE: NO CHANGES, ALTERATIONS OR DISTURBANCE TO THE GRADE BY ADDING FILL, EXCAVATING OR SCRAPING EXCEPT AS NOTED ON PLANS; NO STORAGE OF CONSTRUCTION MATERIAL OR EQUIPMENT; NO STOCKPILING OF ANY CONSTRUCTION MATERIAL OR ANY EXCAVATED MATERIAL NO DISPOSAL OF ANY LIQUIDS (E.G. CONCRETE SLURRY, GAS, OIL, PAINT); NO VEHICULAR TRAFFIC, EQUIPMENT OR EXCESSIVE PEDESTRIAN TRAFFIC NO ATTACHMENT OF ANY WIRES, ROPES, LIGHTS, OR ANY OTHER SUCH ATTACHMENT OTHER THAN THOSE OF PROTECTIVE NATURE TO ANY TREE TO BE PRESERVED; AND NO CLEANING OF EQUIPMENT OR MATERIAL UNDER THE CANOPY OF ANY TREE OR GROUP OF TREES TO REMAIN.

10. PROTECTIVE FENCE SHALL BE ERECTED AROUND TREES IDENTIFIED ON PLAN OR TREES WITH TRUNK DIAMETER GREATER THAN 24 INCHES AS MEASURED AT HEIGHT OF 4 1/2 FEET. PROTECTIVE FENCE SHALL BE 4 FEET HIGH ORANGE PLASTIC MESH OR APPROVED EQUIVALENT SUPPORTED ON STEEL T-POST A MINIMUM OF 6 FEET LONG. PROTECTIVE FENCE SHALL SURROUND TREE AT MINIMUM OF 20 FEET FROM OUTSIDE EDGE OF TREE TRUNK (10 FEET MINIMUM FROM OUTSIDE EDGE OF PALM TRUNK) WITH STEEL T-POST AT A MINIMUM OF 5 FEET ON CENTER.

11. IF TREES OTHER THAN THOSE SPECIFICALLY DESIGNATED FOR REMOVAL ARE DAMAGED BEYOND SURVIVAL CONDITIONS AS DETERMINED BY THE LANDSCAPE ARCHITECT, THE CONTRACTOR SHALL REMOVE SUCH TREES AND REPLACE THE TREE WITH A SAME SPECIES AND SIZE AND MAINTAIN FOR THE DURATION OF CONSTRUCTION OR 12 MONTHS WHICHEVER IS GREATER AT NO COST TO THE OWNER.

12. PROVIDE AN EVEN LAYER OF PLANTING SOIL OVER ALL PLANTING AREAS. REFER TO THE SPECIFICATIONS FOR TOPSOIL MIXTURE DEPTH. REPRESENTATIVE SAMPLES OF SOIL FROM PROJECT SITE SHALL BE SUBMITTED TO A LABORATORY ACCEPTABLE TO THE LANDSCAPE ARCHITECT FOR ANALYSIS OF REQUIRED SOIL AMENDMENTS. TEST RESULTS AND RECOMMENDATIONS FOR TYPES AND AMOUNTS OF SOIL AMENDMENTS TO CORRECT SOIL DEFICIENCIES SHALL BE PRESENTED TO THE LANDSCAPE ARCHITECT FOR REVIEW AND ACCEPTANCE BEFORE PLACING PLANTING SOIL. UNIFORMLY DISTRIBUTE FERTILIZER AND AMENDMENTS OVER PLANTING AREAS AS RECOMMENDED BY THE SOIL ANALYSIS REPORT. ROTOTILL AMENDMENTS INTO TOPSOIL AND EXISTING SOIL LAYERS TO EVENLY INCORPORATE FERTILIZER AND AMENDMENTS.

13. GUY WIRES, FLAGGING, STAKES, WINDBREAKERS, ETC. SHALL BE MAINTAINED AND REPLACED IF NECESSARY BY THE CONTRACTOR UNTIL THE TREE OR SHRUB IS ABLE TO STAND BY ITSELF. THE CONTRACTOR SHALL REMOVE AND DISPOSE AT THE END OF PLANT ESTABLISHMENT PERIOD.

14. AFTER INSTALLATION OF PLANTING & IRRIGATION, LANDSCAPE CONTRACTOR SHALL PROVIDE MARK-UP INFORMATION OF ANY CHANGES MADE IN THE FIELD TO THE FINAL AS-BUILT PLANS.

15. ANY ALTERATION/ADJUSTMENT TO THESE PLANS AFTER CONSTRUCTION IS COMPLETE SHALL BE CONSIDERED FIELD-POSTED AS-BUILT PLANS. INFORMATION ADDED AS FIELD-POSTED AS-BUILT PLANS ARE NOT DRAFTED AS PART OF THE DESIGNED CONSTRUCTION DOCUMENTS AND MUST BE VERIFIED IN THE FIELD.

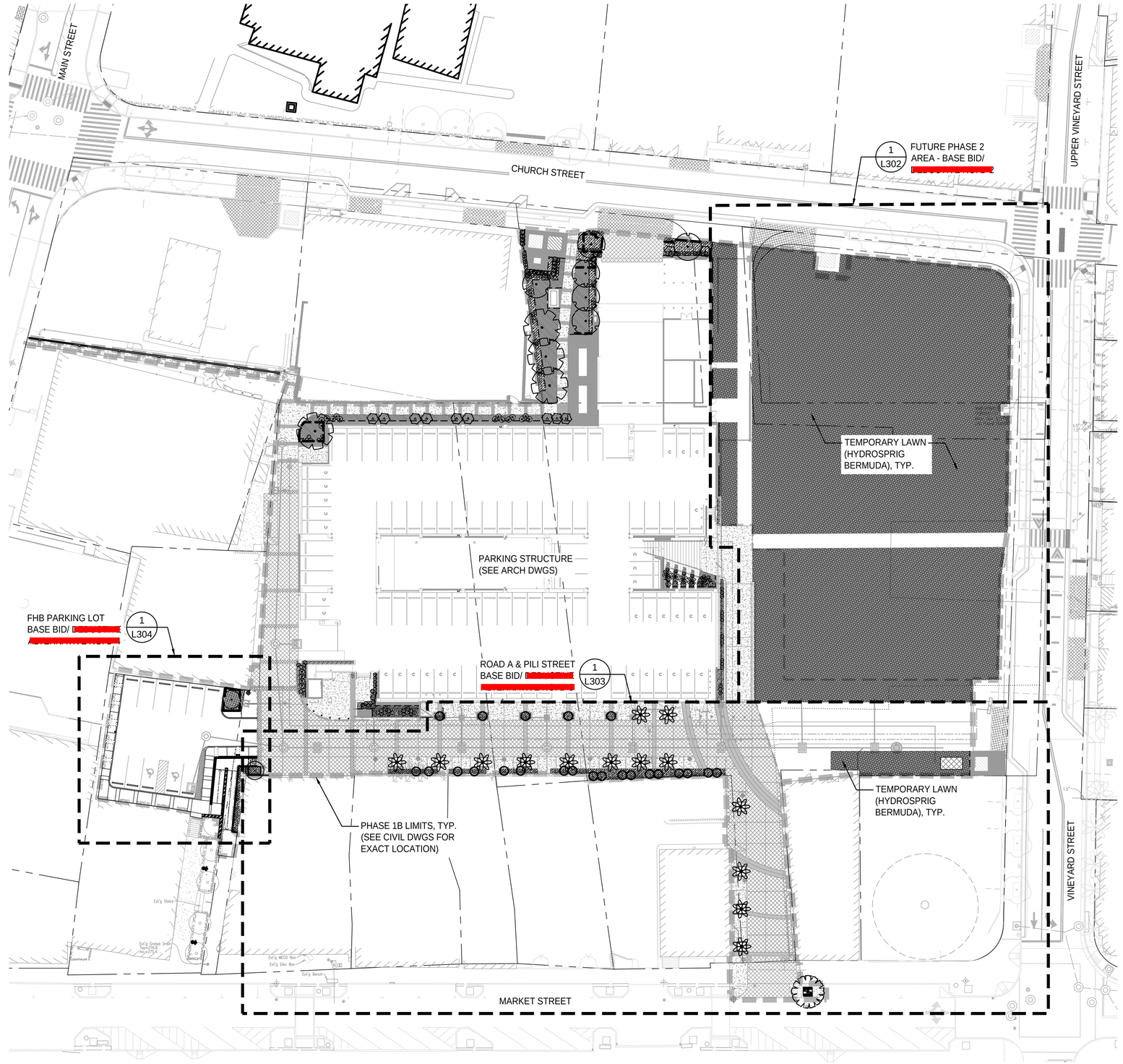


1 OVERALL PLANTING PLAN - BASE BID

SCALE: 1" = 30'-0"

NORTH 0 5 15 30 60 FEET


FERRARO CHOI

FERRARO CHOI AND ASSOCIATES LTD
ARCHITECTURE / INTERIOR ARCHITECTURE / RESEARCH
733 BISHOP ST. SUITE 2620 HONOLULU HI 96813-4016
TEL 808 533 8880 FAX 808 599 3769 www.ferrarochoi.com


R. STANLEY DUNCAN ★ LICENSED PROFESSIONAL LANDSCAPE ARCHITECT No. 5815 ★ HAWAII U.S.A.

EXPIRATION DATE OF LICENSE: 4/30/2021

SIGNATURE

THIS WORK WAS PREPARED BY ME, OR UNDER MY SUPERVISION AND CONSTRUCTION OF THIS PROJECT WILL BE SUPERVISED BY ME OR UNDER MY SUPERVISION. (HRS 464-1 AND 464-4 AS AMENDED BY COMMERCE AND CONSUMER AFFAIRS)

WAILUKU CIVIC COMPLEX PHASE 1B

100% FINAL DESIGN

NOT FOR CONSTRUCTION

SHEET TITLE: OVERALL PLANTING PLAN & NOTES - BASE BID

CADD FILE:

REVISIONS:

PROJECT: 2017-001

DRAWN: PBR

DATE: 7/25/2019

PHASE 1B

SHEET L300

OF SHEETS


COPYRIGHT PROTECTED: THIS WORK IS PROTECTED UNDER THE 1990 ARCHITECTURAL WORKS COPYRIGHT PROTECTION ACT

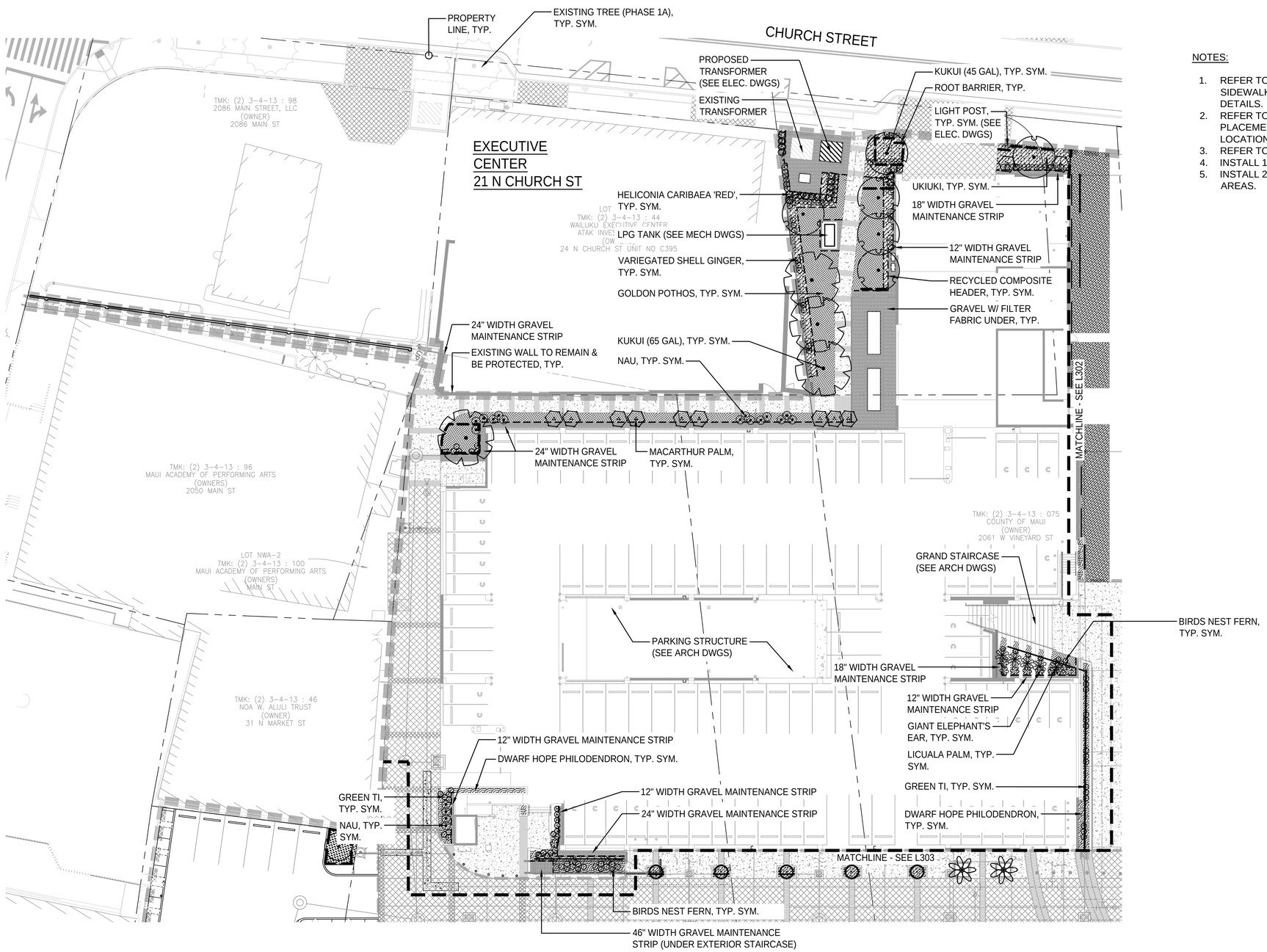


1 PLANTING PLAN - BASE BID

SCALE: 1" = 20'-0"

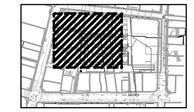

KEY MAP

NOTES:

1. REFER TO CIVIL DRAWINGS FOR GRADING & UTILITIES, WALL & SIDEWALK/WALKWAY LAYOUT, & CONCRETE PAVING & DRIVEWAY DETAILS.
2. REFER TO ELECTRICAL AND LIGHTING PLANS FOR FINAL PLACEMENT AND FIXTURE TYPES. ALL LIGHT POST AND LIGHTING LOCATIONS ARE DIAGRAMMATIC.
3. REFER TO L330 FOR PLANTING DETAILS & ROOT BARRIER DETAIL.
4. INSTALL 12" LAYER OF TOPSOIL OVER ALL NEW PLANTING AREAS.
5. INSTALL 2" LAYER OF MULCH BELOW ALL NEW GROUND COVER AREAS.

FERRARO CHOI
FERRARO CHOI AND ASSOCIATES LTD
ARCHITECTURE / INTERIOR ARCHITECTURE / RESEARCH
733 BISHOP ST. SUITE 2620 HONOLULU HI 96813-4016
TEL 808 533 8880 FAX 808 599 3769 www.ferrarochoi.com

R. STANLEY DUNCAN ★ LICENSED PROFESSIONAL LANDSCAPE ARCHITECT ★ No. 5815 ★ HAWAII ★ U.S.A.

EXPIRATION DATE OF LICENSE: 2019

SIGNATURE

THIS WORK WAS PREPARED BY ME, OR UNDER MY SUPERVISION AND CONSTRUCTION OF THIS PROJECT WILL BE SUPERVISED BY ME OR UNDER MY SUPERVISION. (HRS 464-4 AND HAR 16-115-3 COMMERCE AND CONSUMER AFFAIRS)

# WAILUKU CIVIC COMPLEX PHASE 1B

100% FINAL DESIGN

NOT FOR CONSTRUCTION

SHEET TITLE: PLANTING PLAN - BASE BID

REVISIONS:

PROJECT: 2017-001

DRAWN: PBR

DATE: 7/25/2019

PHASE 1B

SHEET L301

OF SHEETS

CADD FILE:

COPYRIGHT PROTECTED: THIS WORK IS PROTECTED UNDER THE 1990 ARCHITECTURAL WORKS COPYRIGHT PROTECTION ACT

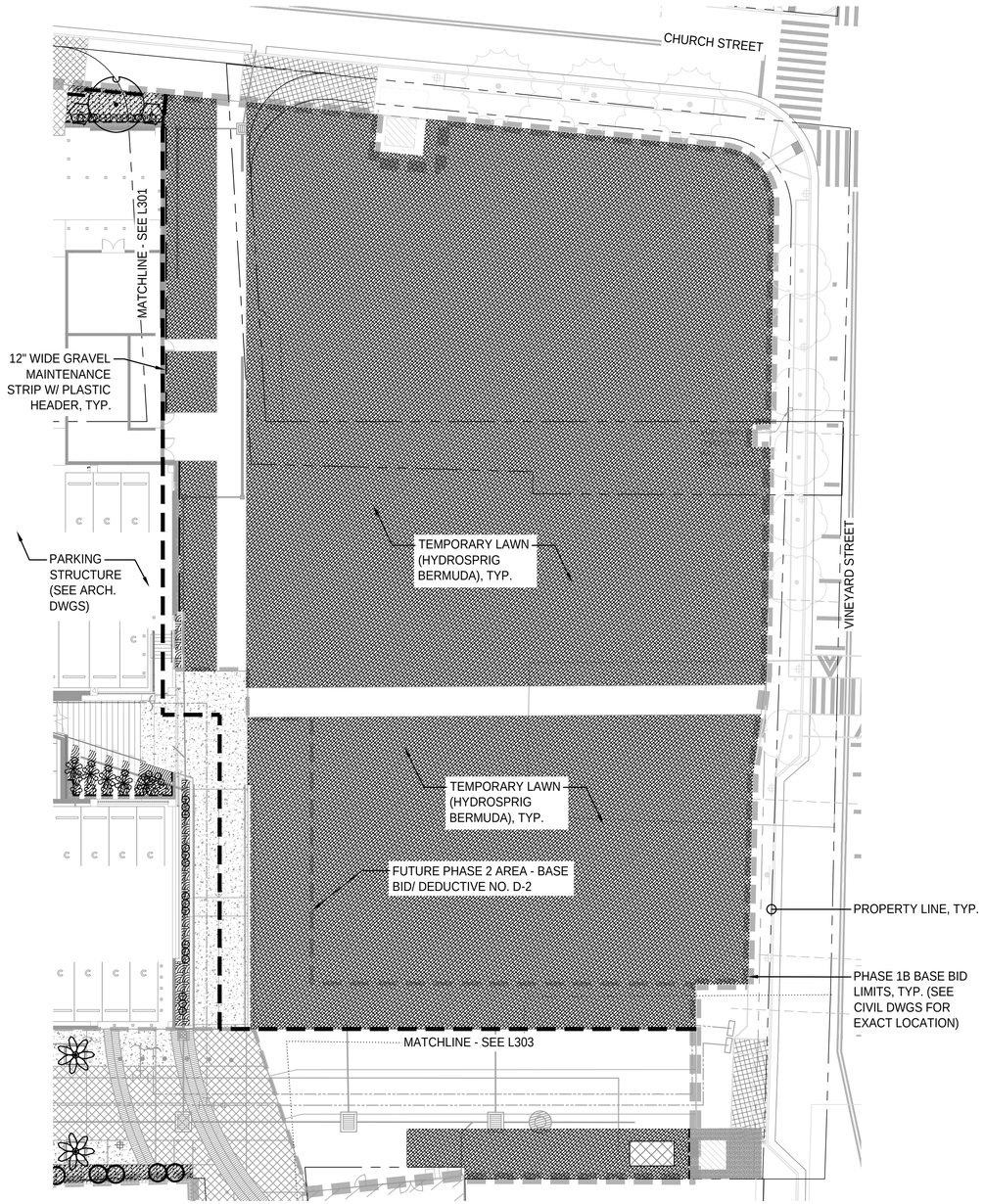


1 PLANTING PLAN - FUTURE PHASE 2 AREA BASE BID

SCALE: 1" = 20'-0"

NORTH 0 4 10 20 40 FEET

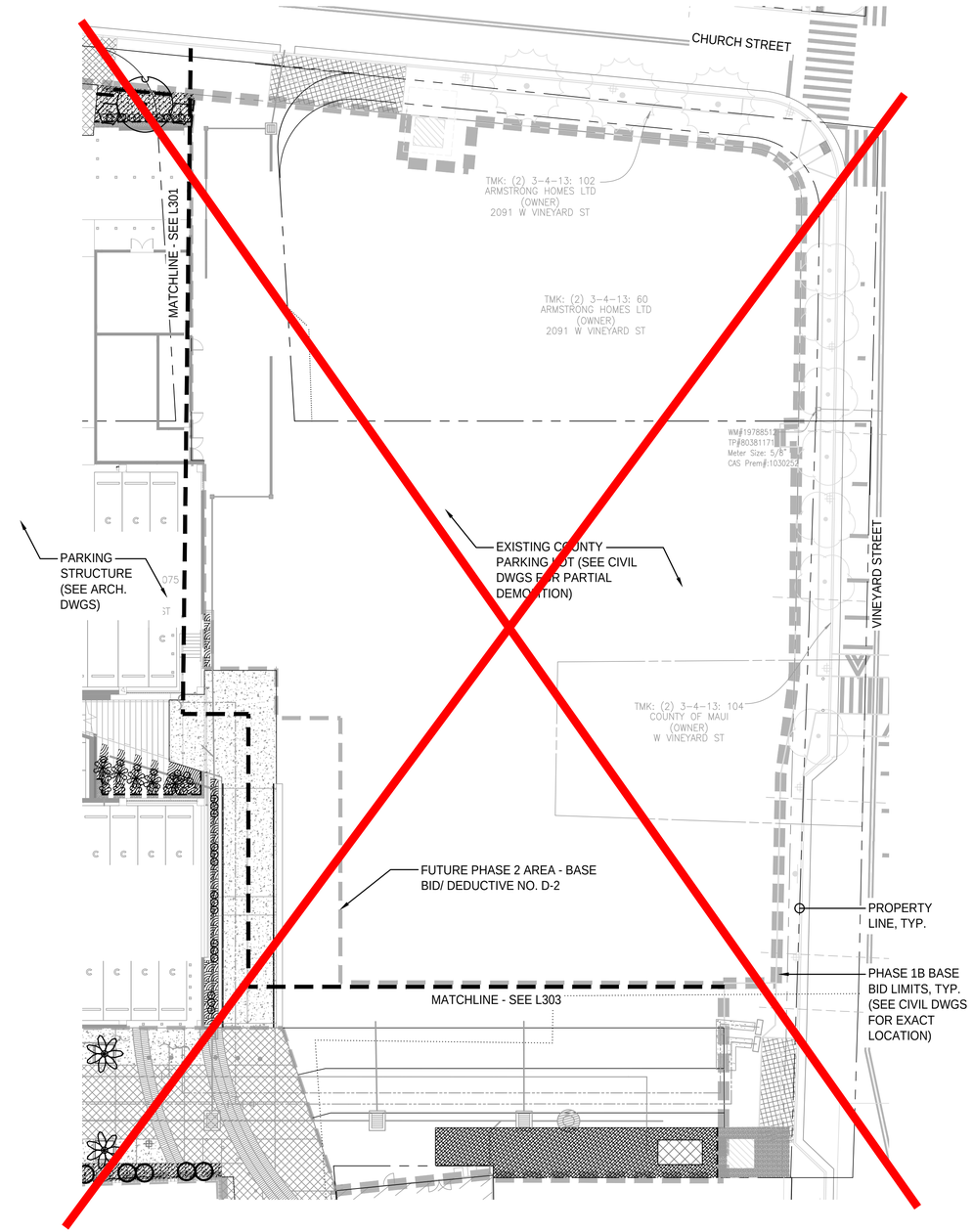


2 ~~PLANTING PLAN - FUTURE PHASE 2 AREA DEDUCTIVE ALT. NO. D-2~~

SCALE: 1" = 20'-0"

NORTH 0 4 10 20 40 FEET

KEY MAP

FERRARO CHOI

FERRARO CHOI AND ASSOCIATES LTD
ARCHITECTURE / INTERIOR ARCHITECTURE / RESEARCH
733 BISHOP ST. SUITE 2620 HONOLULU HI 96813-4016
TEL 808 533 8880 FAX 808 599 3769 www.ferrarochoi.com

R. STANLEY DUNCAN
LICENSED PROFESSIONAL LANDSCAPE ARCHITECT
No. 5815
HAWAII U.S.A.

SIGNATURE: R. Stanley Duncan
EXPIRATION DATE OF LICENSE: 4/30/2020

THIS WORK WAS PREPARED BY ME, OR UNDER MY SUPERVISION AND CONSTRUCTION OF THIS PROJECT WILL BE SUPERVISED BY ME OR UNDER MY SUPERVISION. (HRS CHAPTER 464, COMMERCE AND CONSUMER AFFAIRS)

# WAILUKU CIVIC COMPLEX PHASE 1B

100% FINAL DESIGN

NOT FOR CONSTRUCTION

SHEET TITLE: PLANTING PLANS - BASE BID/ ~~DEDUCTIVE ALT. NO. D-2~~

REVISIONS:

| | |
|---|---|
| PROJECT: | 2017-001 |
| DRAWN: | PBR |
| DATE: | 7/25/2019 |
| PHASE | 1B |
| SHEET | L302 |
| OF | SHEETS |
| CADD FILE: | |

COPYRIGHT PROTECTED: THIS WORK IS PROTECTED UNDER THE 1990 ARCHITECTURAL WORKS COPYRIGHT PROTECTION ACT

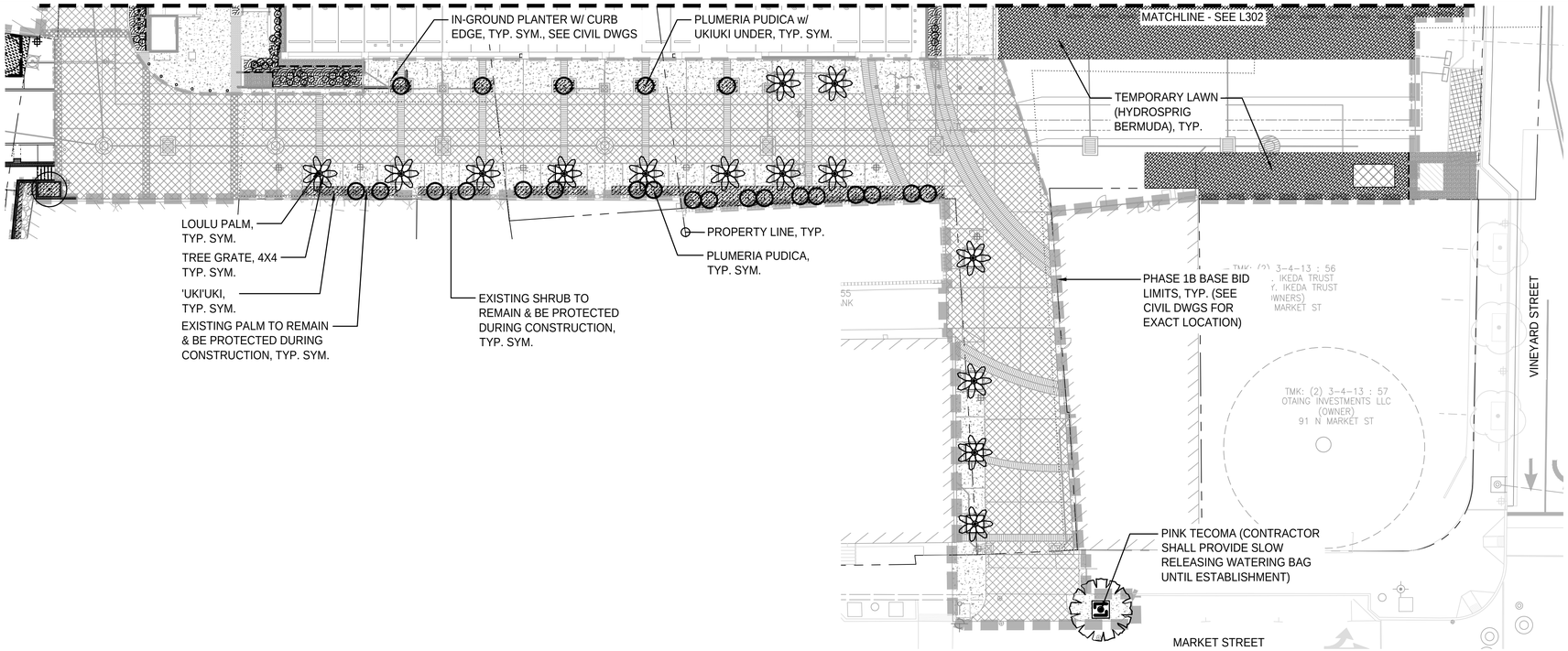


1 PLANTING PLAN - ROAD A & PILI STREET BASE BID

SCALE: 1" = 20'-0"

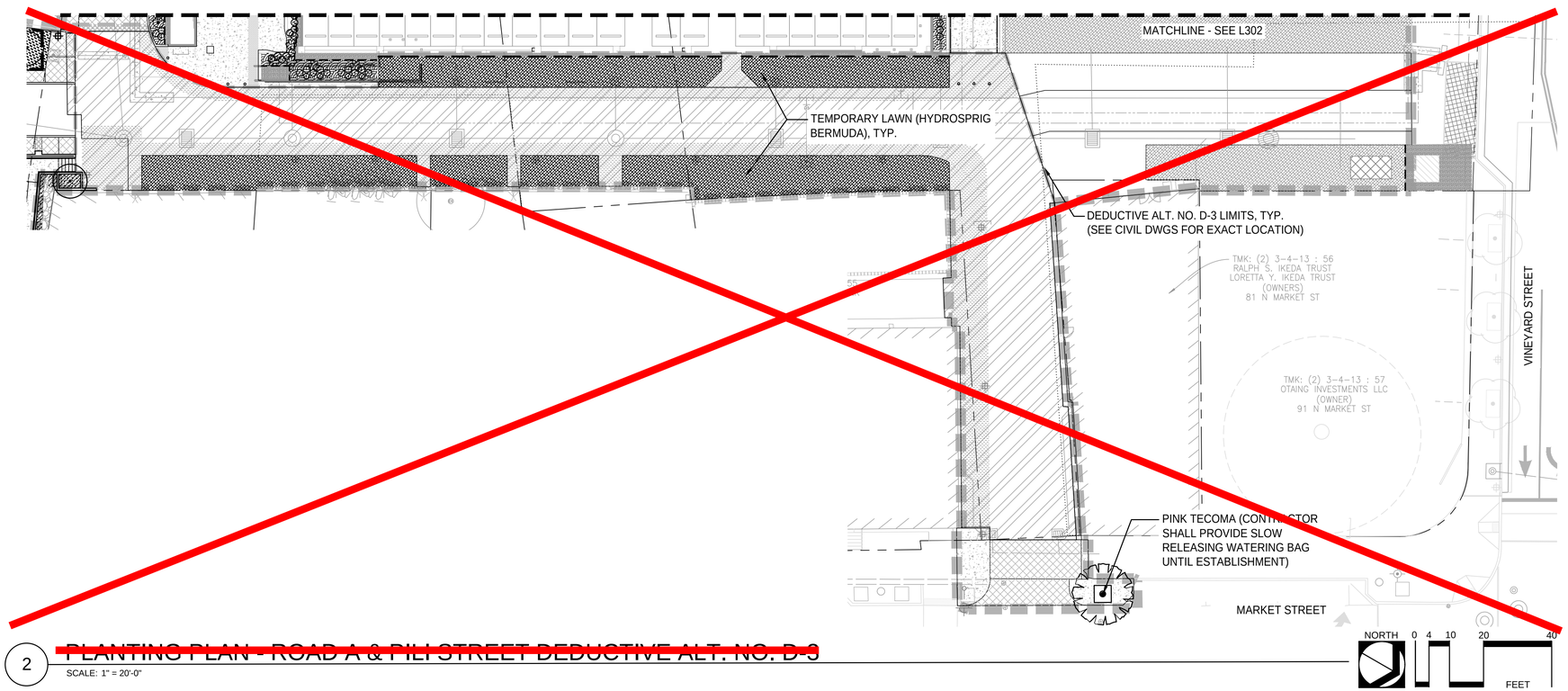


2 ~~PLANTING PLAN - ROAD A & PILI STREET DEDUCTIVE ALT. NO. D-3~~

SCALE: 1" = 20'-0"

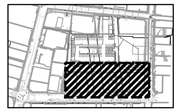

KEY MAP

NOTES:

1. REFER TO CIVIL DRAWINGS FOR GRADING & UTILITIES, WALL & SIDEWALK/WALKWAY LAYOUT, & CONCRETE PAVING & DRIVEWAY DETAILS.
2. REFER TO ELECTRICAL AND LIGHTING PLANS FOR FINAL PLACEMENT AND FIXTURE TYPES. ALL LIGHT POST AND LIGHTING LOCATIONS ARE DIAGRAMMATIC.
3. REFER TO L330 FOR PLANTING DETAILS & ROOT BARRIER DETAIL.
4. INSTALL 12" LAYER OF TOPSOIL OVER ALL NEW PLANTING AREAS.
5. INSTALL 2" LAYER OF MULCH BELOW ALL NEW GROUND COVER AREAS.
6. INSTALL SOIL AMENDMENT OVER ALL TEMPORARY LAWN AREAS.
7. SLOW RELEASING WATERING BAG SHALL BE TREEGATOR WATER BAG OR ACCEPTABLE EQUAL.

FERRARO CHOI
FERRARO CHOI AND ASSOCIATES LTD
ARCHITECTURE / INTERIOR ARCHITECTURE / RESEARCH
733 BISHOP ST. SUITE 2620 HONOLULU HI 96813-4016
TEL 808 533 8880 FAX 808 599 3769 www.ferrarochoi.com

R. STANLEY DUNCAN ★ LICENSED PROFESSIONAL LANDSCAPE ARCHITECT No. 5815 ★ HAWAII U.S.A.

SIGNATURE: R. Stanley Duncan
EXPIRATION OF LICENSE: 4/30/2021

THIS WORK WAS PREPARED BY ME, OR UNDER MY SUPERVISION AND CONSTRUCTION OF THIS PROJECT WILL BE SUPERVISED BY ME OR UNDER MY SUPERVISION. (HRS 464-1 AND HAR 16-215 COMMERCE AND CONSUMER AFFAIRS)

# WAILUKU CIVIC COMPLEX PHASE 1B

100% FINAL DESIGN

NOT FOR CONSTRUCTION

SHEET TITLE: PLANTING PLANS - BASE BID/ ~~DEDUCTIVE ALT. NO. D-3~~

CADD FILE:

REVISIONS:

| | |
|---|---|
| PROJECT: | 2017-001 |
| DRAWN: | PBR |
| DATE: | 7/25/2019 |
| PHASE | 1B |
| SHEET | L303 |
| OF | SHEETS |

COPYRIGHT PROTECTED: THIS WORK IS PROTECTED UNDER THE 1990 ARCHITECTURAL WORKS COPYRIGHT PROTECTION ACT

NOTES:

1. REFER TO CIVIL DRAWINGS FOR GRADING & UTILITIES, WALL & SIDEWALK/WALKWAY LAYOUT, & CONCRETE PAVING & DRIVEWAY DETAILS.
2. REFER TO ELECTRICAL AND LIGHTING PLANS FOR FINAL PLACEMENT AND FIXTURE TYPES. ALL LIGHT POST AND LIGHTING LOCATIONS ARE DIAGRAMMATIC.
3. REFER TO L330 FOR PLANTING DETAILS & ROOT BARRIER DETAIL.
4. INSTALL 12" LAYER OF TOPSOIL OVER ALL NEW PLANTING AREAS.
5. INSTALL 2" LAYER OF MULCH BELOW ALL NEW GROUND COVER AREAS.
6. INSTALL 6" LAYER OF SOIL AMENDMENT OVER ALL TEMPORARY LAWN AREAS.

KEY MAP

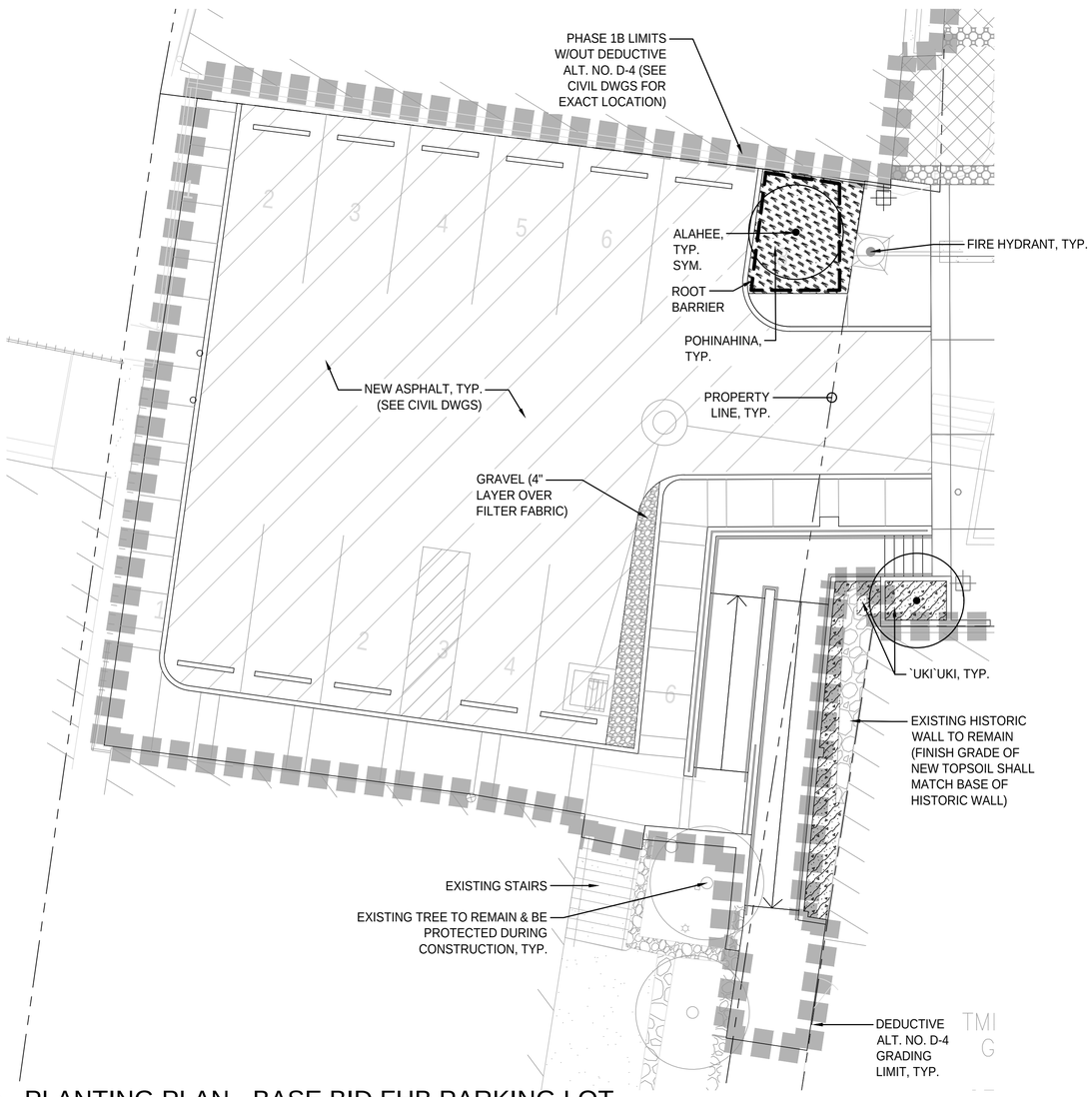


1 PLANTING PLAN - BASE BID FHB PARKING LOT

SCALE: 1/8" = 1'-0"

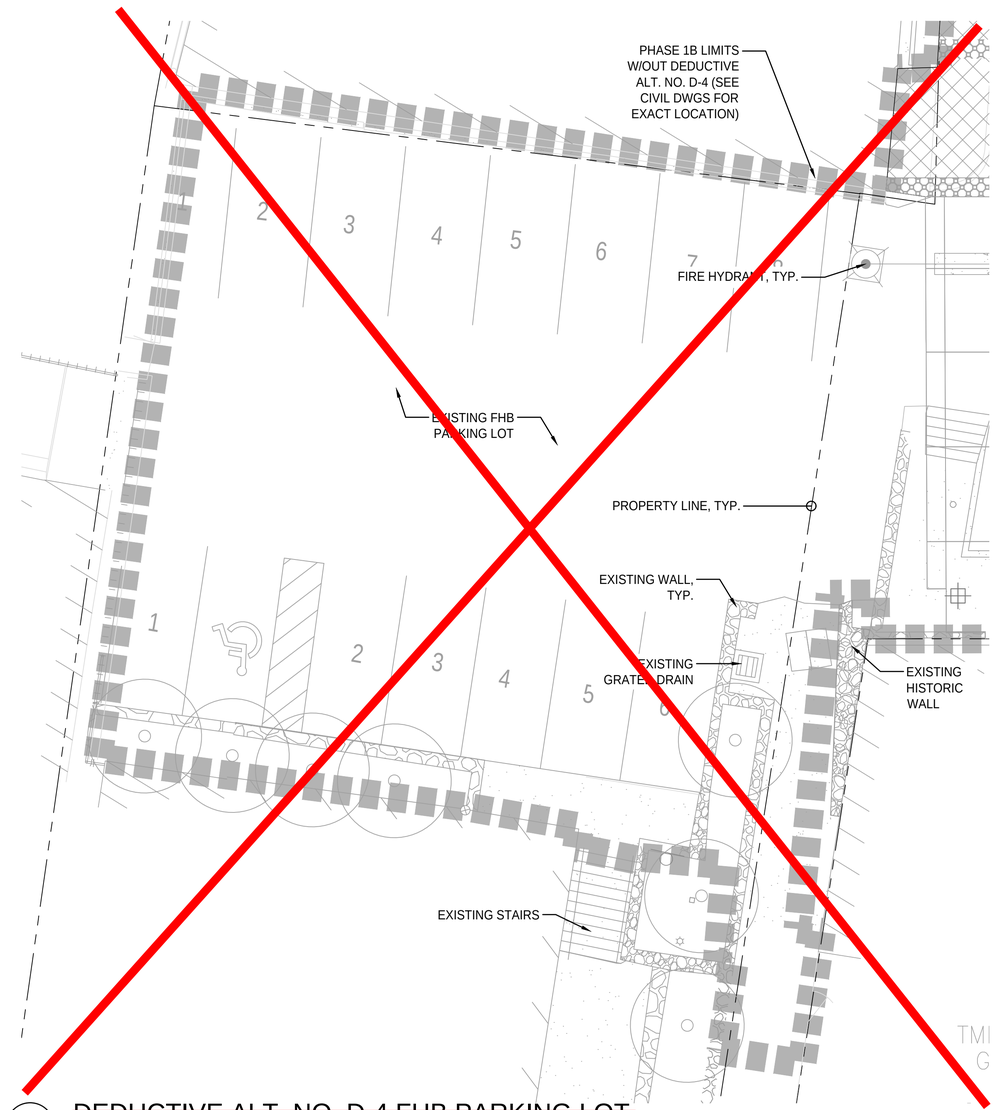


2 ~~DEDUCTIVE ALT. NO. D-4 FHB PARKING LOT~~

SCALE: 1/8" = 1'-0"

NORTH 0 2 4 8 16 FEET

FERRARO CHOI

FERRARO CHOI AND ASSOCIATES LTD
ARCHITECTURE / INTERIOR ARCHITECTURE / RESEARCH
733 BISHOP ST. SUITE 2620 HONOLULU HI 96813-4016
TEL 808 533 8880 FAX 808 599 3769 www.ferrarochoi.com

STANLEY DUNCAN LICENSED PROFESSIONAL LANDSCAPE ARCHITECT No. 5815 HAWAII U.S.A.

SIGNATURE: R. Stanley Duncan EXPIRATION OF LICENSE: 4/30/2020

THIS WORK WAS PREPARED BY ME, OR UNDER MY SUPERVISION AND CONSTRUCTION OF THIS PROJECT WILL BE SUPERVISED BY ME (HRS 464-4, 464-5, 464-7 AND COMMERCE AND CONSUMER AFFAIRS)

# WAILUKU CIVIC COMPLEX PHASE 1B

100% FINAL DESIGN

NOT FOR CONSTRUCTION

SHEET TITLE: PLANTING PLANS - BASE BID/ ~~DEDUCTIVE ALT. NO. D-4~~

CADD FILE:

REVISIONS:

PROJECT: 2017-001

DRAWN: PBR

DATE: 7/25/2019

PHASE 1B

SHEET L304

OF SHEETS

COPYRIGHT PROTECTED: THIS WORK IS PROTECTED UNDER THE 1990 ARCHITECTURAL WORKS COPYRIGHT PROTECTION ACT

# PLANT SCHEDULE - BASE BID

| TREES | QTY | BOTANICAL NAME | COMMON NAME | CONT | CAL | SIZE | TRUNK | BRANCHING | REMARKS |
|---|---|---|---|---|---|---|---|---|---|
| | 6 | ALEURITES MOLUCCANA | KUKUI | 45 GAL | 1 1/2" CAL. MIN. | 7'-0" CLEAR TRUNK | STRAIGHT TRUNK | HIGH BRANCHING | 10 FT MIN. OVERALL HT. UNIFORM TRUNK HEIGHTS, FULL & WELL-BRANCHED |
| | 4 | ALEURITES MOLUCCANA | KUKUI | 65 GAL | 3" CAL. MIN. | 10' TO 12' CLEAR TRUNK | STRAIGHT TRUNK | HIGH BRANCHING | UNIFORM TRUNK HEIGHTS, FULL & WELL-BRANCHED |
| | 1 | TABEBUIA HETEROPHYLLA | PINK TECOMA | 35 GAL | 2" CAL. MIN. | | STRAIGHT TRUNK | HIGH BRANCHING | FULL & WELL-BRANCHED |

| PALM TREES | QTY | BOTANICAL NAME | COMMON NAME | CONT | CAL | SIZE | TRUNK | REMARKS |
|---|---|---|---|---|---|---|---|---|
| | 5 | LICUALA GRANDIS | LICUALA PALM | 45 GAL | | 4' TRUNK HT | STRAIGHT TRUNK | FULL |
| | 11 | PTYCHOSPERMA MACARTHURII | MACARTHUR PALM | 25 GAL | | 8'-10' BROWN TRUNK HEIGHT | | MIN. 3 CANES/POT |

| SHRUBS | QTY | BOTANICAL NAME | COMMON NAME | CONT | O.C. | REMARKS |
|---|---|---|---|---|---|---|
| | 13 | ALOCASIA MACRORRHIZA | GIANT ELEPHANT'S EAR | 3 GAL | AS SHOWN | FULL, MIN 3.5FT HT |
| | 73 | ALPINIA ZERUMBET 'VARIEGATA' | VARIEGATED SHELL GINGER | 3 GAL | AS SHOWN | FULL, MIN. 4 CANES/POT |
| | 13 | ASPLENIUM NIDUS | BIRDS NEST FERN | 1 GAL | AS SHOWN | |
| | 51 | CORDYLINE FRUTICOSA 'EMERALD GREEN' | GREEN TI | 1 GAL. AND 3 GAL. | AS SHOWN | 50% IN 1 GAL, 50% IN 3 GAL, FULL, VARIOUS HTS. |
| | 18 | GARDENIA BRIGHAMII | NAU | 3 GAL | EQ. SPACING | FULL & BUSHY, MIN. 3FT HT |
| | 20 | HELICONIA CARIBAEA 'RED' | HELICONIA CARIBAEA 'RED' | 3 GAL | EQ. SPACING | FULL, MIN. 4 CANES/POT |

| GROUND COVERS | QTY | BOTANICAL NAME | COMMON NAME | CONT | SPACING | REMARKS |
|---|---|---|---|---|---|---|
| | 990 SF | DIANELLA SANDWICENSIS | 'UKI'UKI | 1 GAL | 18" o.c. | COMPACT/SHORTER FORM (1-1.5FT TALL MATURE HEIGHT), TRIANGULAR SPACING |
| | 2,040 SF | EPIPREMNUM AUREUM | GOLDEN POTHOS | 4"POT | 12" o.c. | TRIANGULAR SPACING |
| | 590 SF | PHILODENDRON SELLOUM | 'DWARF HOPE' PHILODENDRON | 6" POTS | 18" o.c. | TRIANGULAR SPACING |

| SPRIG | QTY | BOTANICAL NAME | COMMON NAME | CONT |
|---|---|---|---|---|
| | 990 SF | CYNODON DACTYLON | BERMUDA GRASS | HYDROSPRIG |


FERRARO CHOI

FERRARO CHOI AND ASSOCIATES LTD
ARCHITECTURE / INTERIOR ARCHITECTURE / RESEARCH
733 BISHOP ST. SUITE 2620 HONOLULU HI 96813-4016
TEL 808 533 8880 FAX 808 599 3769 www.ferrarochoi.com


R. STANLEY DUNCAN ★ LICENSED PROFESSIONAL LANDSCAPE ARCHITECT No. 5815 ★ HAWAII, U.S.A.

EXPIRATION DATE OF LICENSE: 4/30/2021

SIGNATURE

THIS WORK WAS PREPARED BY ME, OR UNDER MY SUPERVISION AND CONSTRUCTION OF THIS PROJECT WILL BE SUPERVISED BY ME OR UNDER MY SUPERVISION. (HRS 464-1 AS AMENDED)

# WAILUKU CIVIC COMPLEX PHASE 1B

100% FINAL DESIGN

NOT FOR CONSTRUCTION

SHEET TITLE: PLANTING SCHEDULE - 1 (BASE BID)

CADD FILE:

REVISIONS:

PROJECT: 2017-001

DRAWN: PBR

DATE: 7/25/2019

PHASE 1B

SHEET L320

OF SHEETS


COPYRIGHT PROTECTED: THIS WORK IS PROTECTED UNDER THE 1990 ARCHITECTURAL WORKS COPYRIGHT PROTECTION ACT

## PLANT SCHEDULE - BASE BID NO. D-2 FUTURE PHASE 2 LAWN AREA

| SOD/SEED | QTY | BOTANICAL NAME | COMMON NAME | CONT |
|---|---|---|---|---|
| | 29,500 SF | CYNODON DACTYLON | BERMUDA GRASS | HYDROSPRIG |

## PLANT SCHEDULE - BASE BID DEDUCTIVE ALT. NO. D-3: ROAD A AND PILI STREET

| TREES | QTY | BOTANICAL NAME | COMMON NAME | CONT | CAL | SIZE | TRUNK | BRANCHING | REMARKS |
|---|---|---|---|---|---|---|---|---|---|
| | 1 | TABEBUIA HETEROPHYLLA | PINK TECOMA | 35 GAL | 2" CAL. MIN. | 8' HT. MIN. | STRAIGHT TRUNK | MIN. 7FT CLEAR FROM TOP OF PAVING | FULL & WELL-BRANCHED |

| SPRIG | QTY | BOTANICAL NAME | COMMON NAME | CONT |
|---|---|---|---|---|
| | 4,200 SF | CYNODON DACTYLON | BERMUDA GRASS | HYDROSPRIG |

## PLANT SCHEDULE - BASE BID NO. D-3: ROAD A AND PILI STREET

| TREES | QTY | BOTANICAL NAME | COMMON NAME | CONT | CAL | SIZE | TRUNK | BRANCHING | REMARKS |
|---|---|---|---|---|---|---|---|---|---|
| | 23 | PLUMERIA PUDICA 'BRIDAL BOUQUET' | FRANGIPANI | 15 GAL | 2" CAL. MIN. | 6' HT. MIN. | UNIFORM TRUNK HEIGHTS | | FULL & WELL-BRANCHED |
| | 1 | TABEBUIA HETEROPHYLLA | PINK TECOMA | 35 GAL | 2" CAL. MIN. | 8' HT. MIN. | STRAIGHT TRUNK | HIGH BRANCHING, MIN. 7FT CLEAR FROM WALKWAY | FULL & WELL-BRANCHED |

| PALM TREES | QTY | BOTANICAL NAME | COMMON NAME | CONT | CAL | SIZE | TRUNK | REMARKS |
|---|---|---|---|---|---|---|---|---|
| | 14 | PRITCHARDIA HILLEBRANDII | LOULU PALM | FIELD STOCK | | 7'-9' BROWN TRUNK HEIGHT | UNIFORM TRUNK HEIGHTS | MIN. 7FT CLEAR TRUNK, CLEAN TRUNK |

| GROUND COVERS | QTY | BOTANICAL NAME | COMMON NAME | CONT | SPACING | REMARKS |
|---|---|---|---|---|---|---|
| | 780 SF | DIANELLA SANDWICENSIS | 'UKI'UKI | 1 GAL | 18" o.c. | COMPACT/SHORTER FORM (1-1.5F TALL MATURE HEIGHT) TRIANGULAR SPACING |

## PLANT SCHEDULE - BASE BID NO. D-4

| TREES | QTY | BOTANICAL NAME | COMMON NAME | CONT | CAL | SIZE | REMARKS |
|---|---|---|---|---|---|---|---|
| | 2 | PSYDRAX ODORATA | A'AHE'E | 15 GAL | 2" CAL. MIN. | 5' - 6' HT. | FULL & SYMMETRICAL BRANCHING |

| GROUND COVERS | QTY | BOTANICAL NAME | COMMON NAME | CONT | SPACING | REMARKS |
|---|---|---|---|---|---|---|
| | 120 SF | DIANELLA SANDWICENSIS | 'UKI'UKI | 1 GAL | 18" o.c. | COMPACT/SHORTER FORM (1-1.5FT TALL MATURE HEIGHT), TRIANGULAR SPACING |
| | 150 SF | VITEX ROTUNDIFOLIA | POHINAHINA | 4" POT | 12" o.c. | TRIANGULAR SPACING |

FERRARO CHOI
FERRARO CHOI AND ASSOCIATES LTD
ARCHITECTURE / INTERIOR ARCHITECTURE / RESEARCH
733 BISHOP ST. SUITE 2620 HONOLULU HI 96813-4016
TEL 808 533 8880 FAX 808 599 3769 www.ferrarochoi.com

R. STANLEY DUNCAN ★ LICENSED PROFESSIONAL LANDSCAPE ARCHITECT No. 5815 ★ HAWAII, U.S.A.

SIGNATURE: R. Stanley Duncan
EXPIRATION DATE OF LICENSE: 4/30/2020
THIS WORK WAS PREPARED BY ME, OR UNDER MY SUPERVISION AND CONSTRUCTION SITE VISITS PROJECT WILL BE SUPERVISED BY ME OR UNDER MY SUPERVISION. (HRS 464-1 THROUGH 464-7, COMMERCE AND CONSUMER AFFAIRS)

WAILUKU CIVIC COMPLEX PHASE 1B

100% FINAL DESIGN
NOT FOR CONSTRUCTION

SHEET TITLE: PLANTING SCHEDULE - 2 (~~DEDUCTIVE ALT.~~)

CADD FILE:

REVISIONS:

PROJECT: 2017-001
DRAWN: PBR
DATE: 7/25/2019
PHASE 1B
SHEET L321
OF SHEETS

COPYRIGHT PROTECTED: THIS WORK IS PROTECTED UNDER THE 1990 ARCHITECTURAL WORKS COPYRIGHT PROTECTION ACT

## LANDSCAPE MATERIALS SCHEDULE - BASE BID

| DESCRIPTION | QTY |
|---|---|
| IMPORTED TOPSOIL 12" DEPTH (ALL GROUNDCOVER & SHRUB AREAS) | 160 CY |
| IMPORTED TOPSOIL 4" DEPTH (ALL HYDROSPRIG AREAS) | 540 CY |
| SOIL AMENDMENT, 6" LAYER (ALL GROUNDCOVER & SHRUB AREAS) | 80 CY |
| SOIL AMENDMENT, 2" LAYER (ALL HYDROSPRIG AREAS) | 270 CY |
| BARK MULCH, 2" LAYER (ALL GROUNDCOVER AREAS) | 4310 SF |
| ROOT BARRIER | 150 LF |
| GRAVEL MAINTENANCE STRIP, 4" LAYER | 24 CY |
| RECYCLED COMPOSITE HEADER (AT MAINTENANCE STRIPS BY GROUNDCOVER AREAS) | 645 LF |
| GRAVEL DRAINAGE LAYER AT BOTTOM OF PLANTERS, 6" LAYER | 20 CY |
| WEED FILTER FABRIC UNDER GRAVEL MAINTENANCE STRIP | 2,100 SF |
| PLANTER FILTER FABRIC WRAPPED AROUND GRAVEL DRAINAGE LAYER | 1,200 SF |

## LANDSCAPE MATERIALS SCHEDULE - BASE BID NO. D-2 FUTURE PHASE 2 LAWN AREA

| DESCRIPTION | QTY |
|---|---|
| IMPORTED TOPSOIL 4" DEPTH (ALL HYDROSPRIG AREAS) | 490 CY |
| SOIL AMENDMENT, 2" LAYER (ALL HYDROSPRIG AREAS) | 250 CY |
| GRAVEL MAINTENANCE STRIP, 4" LAYER | 2 CY |
| PLASTIC EDGING (AT MAINTENANCE STRIPS BY LAWN AREAS) | 150 LF |
| WEED FILTER FABRIC UNDER GRAVEL MAINTENANCE STRIP | 150 SF |

## REFERENCE NOTES SCHEDULE - BASE BID DEDUCTIVE ALT. NO. D-3: ROAD A AND PILI STREET

| DESCRIPTION | QTY |
|---|---|
| IMPORTED TOPSOIL, 4" LAYER (ALL HYDROSPRIG AREAS) | 52 CY |
| SOIL AMENDMENT, 2" LAYER (ALL HYDROSPRIG AREAS) | 13 CY |
| GRAVEL MAINTENANCE STRIP, 4" LAYER | 3 CY |
| WEED FILTER FABRIC UNDER GRAVEL MAINTENANCE STRIP | 200 SF |
| PLASTIC EDGING (BETWEEN LAWN & GRAVEL MAINTENANCE STRIP) | 180 LF |

## REFERENCE NOTES SCHEDULE - BASE BID NO. D-3: ROAD A AND PILI STREET

| DESCRIPTION | QTY |
|---|---|
| IMPORTED TOPSOIL 12" DEPTH | 35 CY |
| SOIL AMENDMENT, 6" | 17 CY |
| ROOT BARRIER | 360 LF |
| NO. 3 GRAVEL 2" LAYER IN TREE WELL | 2 CY |
| BARK MULCH, 2" LAYER | 370 SF |

## MATERIALS SCHEDULE PHASE 1B BASE BID NO. D-4

| DESCRIPTION | QTY |
|---|---|
| IMPORTED TOPSOIL 12" DEPTH | 22 CY |
| SOIL AMENDMENT, 6" | 11 CY |
| BARK MULCH, 2" LAYER | 270 SF |
| TREX HEADER | 30 LF |
| ROOT BARRIER | 40 LF |
| GRAVEL MAINTENANCE STRIP, 4" LAYER | 1 CY |
| FILTER FABRIC UNDER GRAVEL MAINTENANCE STRIP | 80 SF |

## LITTLE FIRE ANT PREVENTION PROGRAM

1. LANDSCAPE CONTRACTOR WILL NOTIFY LANDSCAPE ARCHITECT OF RECORD AND THE OWNER'S REPRESENTATIVE PRIOR TO DELIVERY OF ANY PLANT MATERIALS TO THE PROJECT.
2. LANDSCAPE CONTRACTOR WILL SUBMIT A PLAN TO THE LANDSCAPE ARCHITECT AND THE OWNER'S REPRESENTATIVE FOR APPROVAL TO PREVENT IMPORTATION OF LITTLE FIRE ANT (LFA) ONTO THE PROPERTY, I.E. PROVIDE QUARANTINE OR A HOLDING AREA FOR 6 WEEKS BEFORE PLANT DELIVERY TO PROJECT SITE.
3. LANDSCAPE CONTRACTOR WILL BUY PLANTS OR PLANTING MATERIALS ONLY FROM FIRE ANT–FREE NURSERIES AND SUPPLIERS.
4. LANDSCAPE CONTRACTOR WILL TEST FOR LFA AND IDENTIFY THE SPECIES CORRECTLY. CONSULT WEBSITE: WWW.LITTLEFIREANTS.COM FOR TESTING METHODS AND SPECIES IDENTIFICATION.
5. LANDSCAPE CONTRACTOR WILL BAIT AND ALLOW AT LEAST 2 WEEKS FOR THE BAIT TO BE CARRIED BACK TO THE COLONY FOR ALL PLANTS AND NURSERY MATERIALS AT THE SUPPLYING NURSERIES REGARDLESS OF THE FIRE ANT–FREE CLAIM.
6. LANDSCAPE CONTRACTOR WILL APPLY A BARRIER TREATMENT, FOLLOWING THE BAITING, TO ALL NURSERY MATERIALS AT THE SUPPLYING NURSERIES REGARDLESS OF THE FIRE ANT–FREE CLAIM.
7. LANDSCAPE CONTRACTOR WILL DRENCH ALL SOILS OR LOOSE NURSERY MATERIALS WITH THE PROPER MIXTURE OF SEVEN PER GALLON OF WATER INDICATED BY THE MANUFACTURER AND FOLLOW MANUFACTURER'S SAFETY PRECAUTIONS.

## SPECIAL NOTE - COQUI FROG

(ELEUTHERODACTYLUS COQUI AND/OR ELUTHERODACTYLUS PLANROSTRIS:

1. PRIOR TO TRANSPORT TO THE PROJECT, INSPECT, TAKE PRECAUTIONS, AND CERTIFY THAT PLANT MATERIALS, EQUIPMENT AND VEHICLES ARE FREE OF COQUI FROGS AND/OR THEIR EGGS.
2. IN THE EVENT OF THE PRESENCE OF COQUI FROGS AND/OR THEIR EGGS, THEY SHALL BE COMPLETELY DESTROYED AND REMOVED AND THE PLANT MATERIAL, EQUIPMENT, OR VEHICLE TREATED AS RECOMMENDED BY THE STATE AND RE–INSPECTED.
3. REPORT PRESENCE OF COQUI FROGS OR EGGS TO THE HAWAII DEPT. OF AGRICULTURE PEST HOTLINE AT (808) 643–PEST (7378), OR THE OAHU INVASIVE SPECIES COMMITTEE (OISC) PH. (808) 266–7794 OR EMAIL: OISCMGR@HAWAII.EDU

FERRARO CHOI
FERRARO CHOI AND ASSOCIATES LTD
ARCHITECTURE / INTERIOR ARCHITECTURE / RESEARCH
733 BISHOP ST. SUITE 2620 HONOLULU HI 96813-4016
TEL 808 533 8880 FAX 808 599 3769 www.ferrarochoi.com

R. STANLEY DUNCAN ★ LICENSED PROFESSIONAL LANDSCAPE ARCHITECT No. 5815 ★ HAWAII U.S.A.

SIGNATURE: R. Stanley Duncan
EXPIRATION DATE OF LICENSE: 4/30/2020
THIS WORK WAS PREPARED BY ME, OR UNDER MY SUPERVISION AND CONSTRUCTION OF THIS PROJECT WILL BE OBSERVED BY ME OR MY AUTHORIZED REPRESENTATIVE. (HRS 464-1 AND CONSUMER AFFAIRS)

WAILUKU CIVIC COMPLEX PHASE 1B

100% FINAL DESIGN
NOT FOR CONSTRUCTION

SHEET TITLE: PLANTING NOTES AND MATERIAL SCHEDULE (BASE BID/ ~~DEDUCTIVE ALT.~~)

REVISIONS: △ △ △ △ △

CADD FILE:

PROJECT: 2017-001
DRAWN: PBR
DATE: 7/25/2019
PHASE 1B
SHEET L322
OF SHEETS

COPYRIGHT PROTECTED: THIS WORK IS PROTECTED UNDER THE 1990 ARCHITECTURAL WORKS COPYRIGHT PROTECTION ACT

NOTES:
1. PLACE TOP EDGE OF PLASTIC ROOT BARRIER AT FINISH GRADE AND SECURE W/MANUFACTURER PROVIDED PINS.
2. SEAMS SHALL HAVE MINIMUM 3" OVERLAP. REFER TO MANUFACTURER INSTRUCTIONS FOR BONDING THE SEAM.
3. DO NOT ALLOW GAPS IN BARRIER DURING INSTALLATION OR BACKFILLING.
4. PLASTIC ROOT BARRIER SHOULD NOT BE LEFT EXPOSED TO SURFACE WATER OR SUNLIGHT FOR MORE THAN 12 HOURS SINCE HIGH TEMPERATURES AND SUNLIGHT REDUCE EFFECTIVE LIFE OF PRODUCT. REFER TO PRODUCT LABEL AND MSDS SHEET FOR SAFETY INFORMATION.
5. REFER TO PLANTING FOR TREE LOCATIONS.

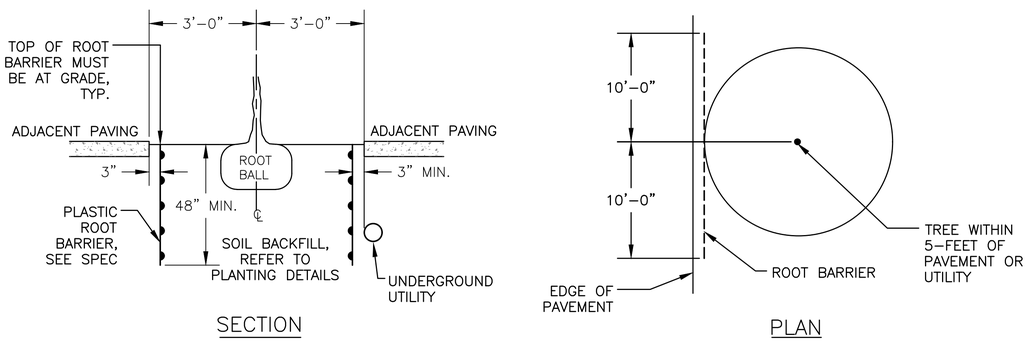


1 ROOT BARRIER
NOT TO SCALE

NOTE:
TRUNK MUST BE PROTECTED FROM ROPE SLING BURNS AND ABRASIONS DURING MOVING. TREE SHALL BE PLUMB. IF TREE IS LEANING AT THE END OF THE PLANT ESTABLISHMENT PERIOD, THE TREE SHALL BE REJECTED.

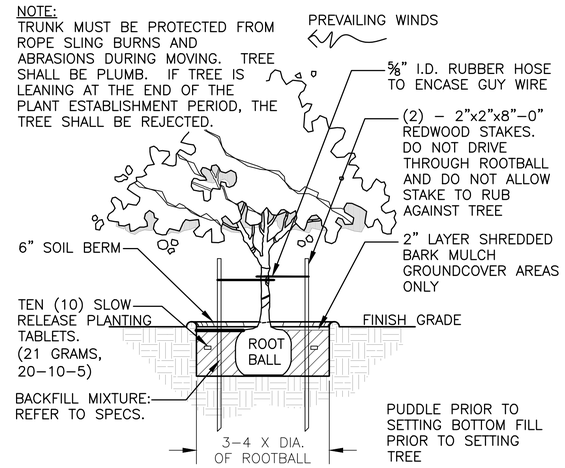


2 TREE PLANTING WITH DOUBLE STAKING AND STRAPS
NOT TO SCALE
P-MA-3365.02-30

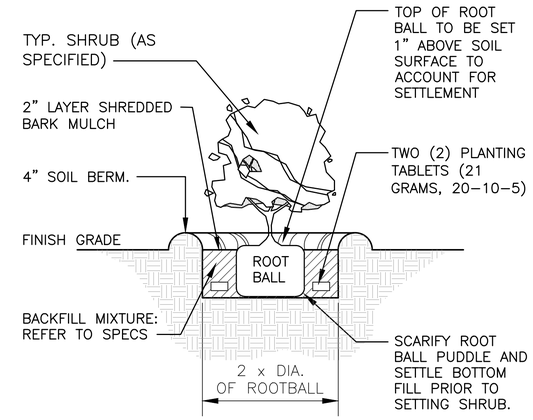


3 SHRUB PLANTING
NOT TO SCALE
P-MA-3365.02-04

NOTE:
IMMEDIATELY AFTER PLANTING, WATER HEAVILY TO ENSURE SOIL SETTLES AROUND ROOTS.

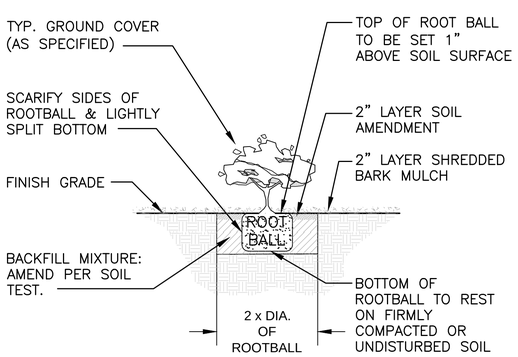


4 GROUND COVER PLANTING
NOT TO SCALE
P-MA-3365.02-02

NOTE:
1. S = SPACING, (REFER TO PLANT LIST FOR SPACING)
2. USE SPACING LAYOUT FOR SHRUBS, GROUNDCOVERS, AND ANNUALS

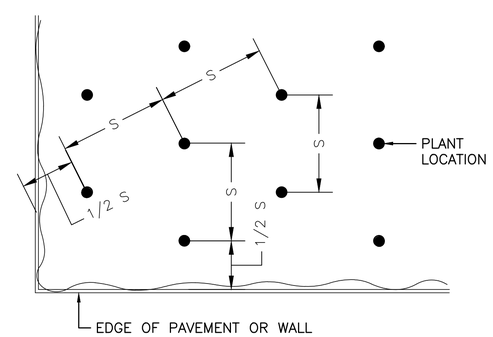


5 TRIANGULAR SPACING
NOT TO SCALE
P-MA-3365.02-01

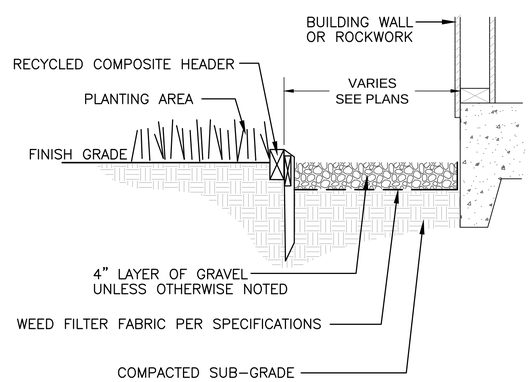


6 MAINTENANCE STRIP
NOT TO SCALE

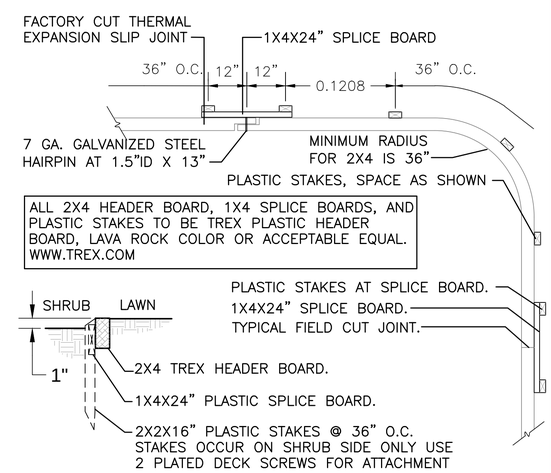


7 RECYCLED COMPOSITE 2X4 HEADER
NOT TO SCALE
P-0A-3541.01-22


FERRARO CHOI
FERRARO CHOI AND ASSOCIATES LTD
ARCHITECTURE / INTERIOR ARCHITECTURE / RESEARCH
733 BISHOP ST. SUITE 2620 HONOLULU HI 96813-4016
TEL 808 533 8880 FAX 808 599 3769 www.ferrarochoi.com


STANLEY DUNCAN ★ LICENSED PROFESSIONAL LANDSCAPE ARCHITECT ★ No. 5815 ★ HAWAII ★ U.S.A.
EXPIRATION DATE OF LICENSE: 4/30/2020
SIGNATURE
THIS WORK WAS PREPARED BY ME OR UNDER MY SUPERVISION AND CONSTRUCTION OF THIS PROJECT WILL BE SUPERVISED BY ME OR UNDER MY SUPERVISION. (HRS 464-1 AND 464-4 AS AMENDED)

WAILUKU CIVIC COMPLEX PHASE 1B
100% FINAL DESIGN
NOT FOR CONSTRUCTION

SHEET TITLE: PLANTING DETAILS - 1 (BASE BID)

REVISIONS:

PROJECT: 2017-001
DRAWN: PBR
DATE: 7/25/2019
PHASE 1B
SHEET L330
OF SHEETS
CADD FILE:


COPYRIGHT PROTECTED: THIS WORK IS PROTECTED UNDER THE 1990 ARCHITECTURAL WORKS COPYRIGHT PROTECTION ACT

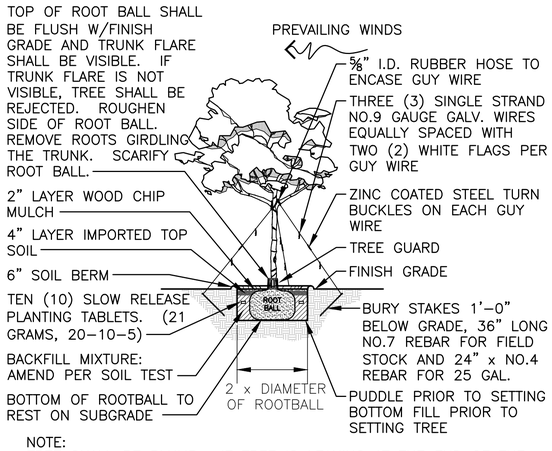


NOTE:
TREE SHALL BE PLUMB. IF TREE IS LEANING AT THE END OF THE PLANT ESTABLISHMENT PERIOD, THE TREE SHALL BE REJECTED.

1 FIELD STOCK TREE PLANTING DETAIL

NOT TO SCALE

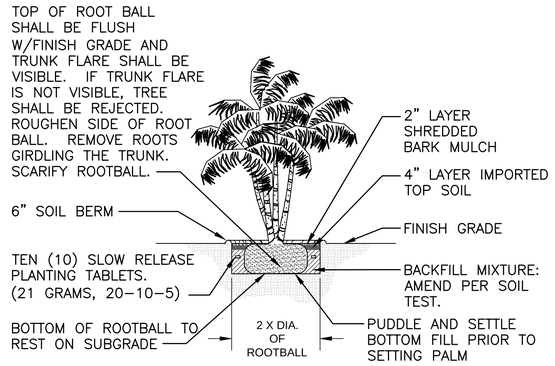


NOTES:
1. TRUNKS MUST BE PROTECTED FROM ROPE SLING BURNS AND ABRASIONS DURING MOVING.
2. PRUNE OFF ALL DEAD FRONDS.
3. WATER HEAVILY TO INSURE SOIL SETTLES AROUND ROOTS.
4. PALM SHALL BE PLUMB, IF THERE IS LEANING AT THE END OF THE PLANT ESTABLISHMENT PERIOD, THE TREE SHALL BE REJECTED.

2 MULTI-TRUNK PALM PLANTING DETAIL

NOT TO SCALE

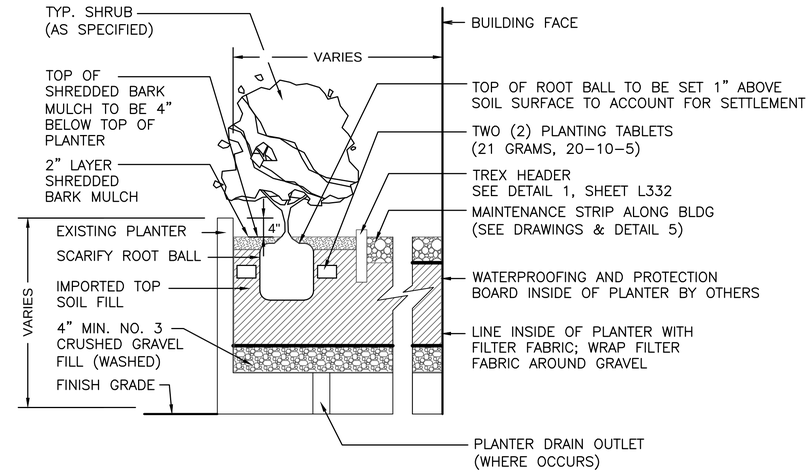


3 SHRUB PLANTIING IN OPEN BOTTOM PLANTER DETAIL

NOT TO SCALE

FERRARO CHOI
FERRARO CHOI AND ASSOCIATES LTD
ARCHITECTURE / INTERIOR ARCHITECTURE / RESEARCH
733 BISHOP ST. SUITE 2620 HONOLULU HI 96813-4016
TEL 808 533 8880 FAX 808 599 3769 www.ferrarochoi.com

R. STANLEY DUNCAN ★ LICENSED PROFESSIONAL LANDSCAPE ARCHITECT No. 5815 ★ U.S.A. HAWAII

EXPIRATION DATE OF LICENSE

SIGNATURE

THIS WORK WAS PREPARED BY ME, OR UNDER MY SUPERVISION AND CONSTRUCTION OF THIS PROJECT WILL BE SUPERVISED BY ME, OR UNDER MY SUPERVISION. (HRS 464-1 AS AMENDED)

# WAILUKU CIVIC COMPLEX PHASE 1B

100% FINAL DESIGN

NOT FOR CONSTRUCTION

SHEET TITLE:

PLANTING DETAILS - 2 (BASE BID)

CADD FILE:

REVISIONS:

△

△

△

△

△

PROJECT: 2017-001

DRAWN: PBR

DATE: 7/25/2019

PHASE 1B

SHEET L331

OF SHEETS

COPYRIGHT PROTECTED: THIS WORK IS PROTECTED UNDER THE 1990 ARCHITECTURAL WORKS COPYRIGHT PROTECTION ACT

NOTES:
1. TRUNK MUST BE PROTECTED FROM ROPE SLING BURNS AND ABRASIONS DURING MOVING.
2. PROTECT HEART AND TIP FROM DAMAGE AND BREAKAGE DURING TRANSPORTING AND TRANSPLANTING.

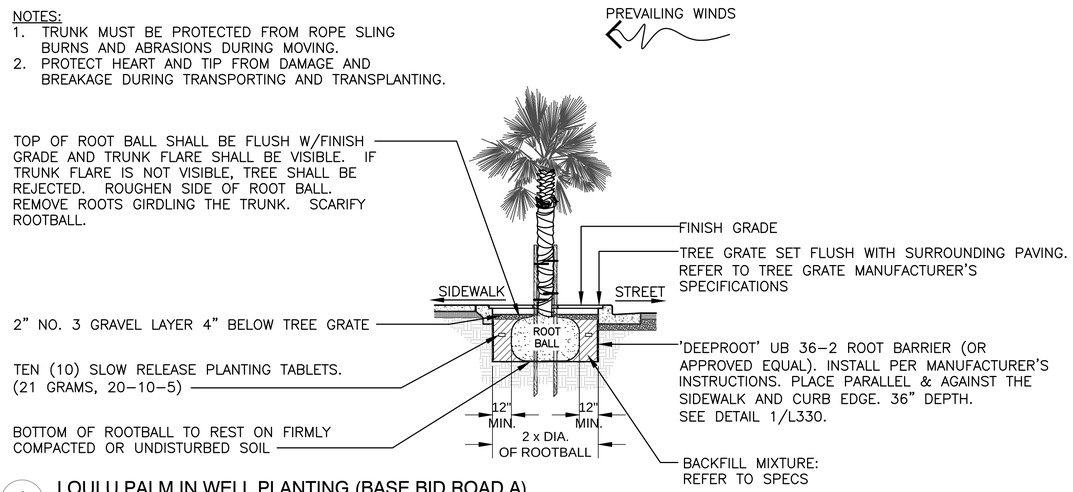


1 LOULU PALM IN WELL PLANTING (BASE BID ROAD A)

NOT TO SCALE

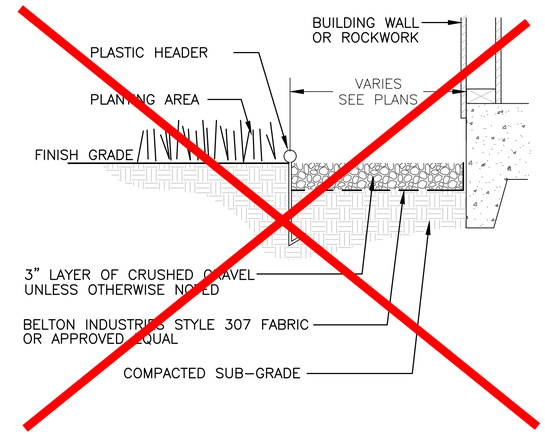


2 ~~MAINTENANCE STRIP (DEDUCT ALT. NO. D-2 & D-3)~~

NOT TO SCALE

FERRARO CHOI


FERRARO CHOI AND ASSOCIATES LTD
ARCHITECTURE / INTERIOR ARCHITECTURE / RESEARCH
733 BISHOP ST. SUITE 2620 HONOLULU HI 96813-4016
TEL 808 533 8880 FAX 808 599 3769 www.ferrarochoi.com


R. STANLEY DUNCAN ★ LICENSED PROFESSIONAL LANDSCAPE ARCHITECT No. 5815 ★ HAWAII, U.S.A.

SIGNATURE: R. Stanley Duncan

EXPIRATION OF LICENSE: (NOT VALID WITHOUT SEAL)

THIS WORK WAS PREPARED BY ME, OR UNDER MY SUPERVISION AND CONSTRUCTION OF THIS PROJECT WILL BE SUPERVISED BY ME OR UNDER MY SUPERVISION. (HRS 464-1 AND 464-4 COMMERCE AND CONSUMER AFFAIRS)

# WAILUKU CIVIC COMPLEX PHASE 1B

100% FINAL DESIGN

NOT FOR CONSTRUCTION

SHEET TITLE: PLANTING DETAILS - 3 BASE BID/ ~~DEDUCT ALT. NO. D-2 & D-3~~

CADD FILE:

REVISIONS:

| | |
|---|---|
| PROJECT: | 2017-001 |
| DRAWN: | PBR |
| DATE: | 7/25/2019 |
| PHASE | 1B |
| SHEET | L332 |
| OF | SHEETS |


COPYRIGHT PROTECTED: THIS WORK IS PROTECTED UNDER THE 1990 ARCHITECTURAL WORKS COPYRIGHT PROTECTION ACT

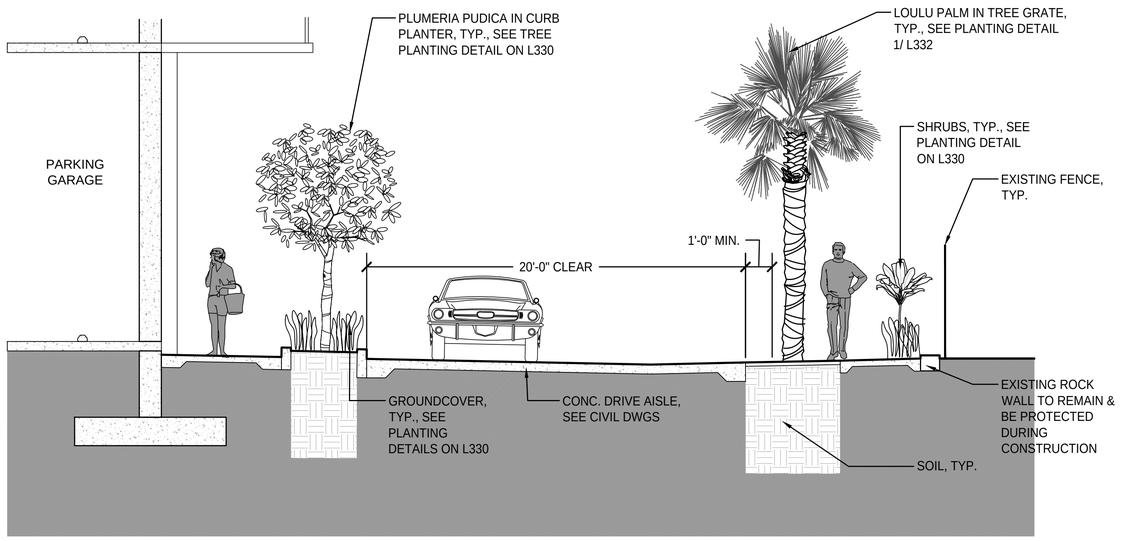


1 SECTION 1 - SHARED PROMENADE (BASE BID ROAD A)

SCALE: 1/4" = 1'-0"

0 1 2 4 8 FEET

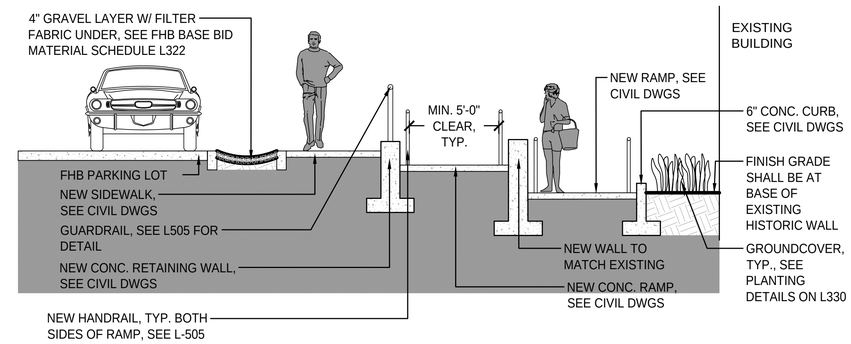


2 SECTION 2 - RAMP (BASE BID FHB PARKING LOT)

SCALE: 1/4" = 1'-0"

0 1 2 4 8 FEET

NOTES:

1. FHB = FIRST HAWAIIAN BANK
2. REFER TO ARCH AND STRUCTURAL DRAWINGS FOR BUILDING SECTIONS & WALL AND STAIR DETAILS.
3. REFER TO CIVIL DRAWINGS FOR GRADING AND UTILITY DRAWINGS & CONCRETE WALKWAY AND DRIVEWAY DETAILS.
4. REFER TO PLANTING PLANS AND DETAILS FOR TREE, SHRUB, GROUNDCOVER & TURF INSTALLATION.

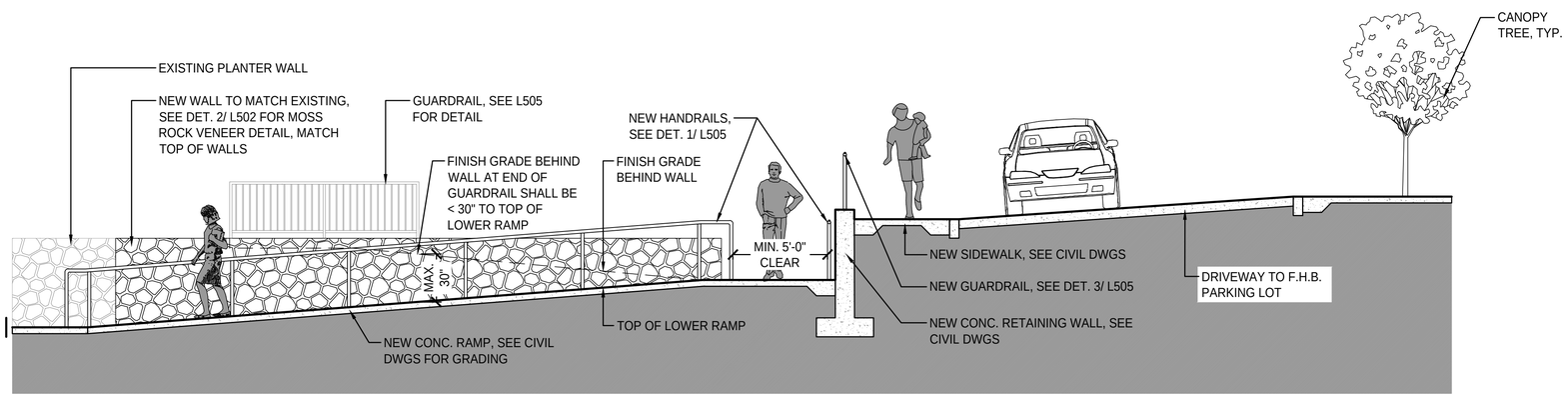


3 SECTION 3 - RAMP (BASE BID FHB PARKING LOT)

SCALE: 1/4" = 1'-0"

0 1 2 4 8 FEET

NORTH

KEY MAP

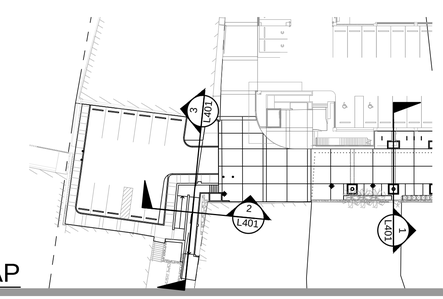


FERRARO CHOI

FERRARO CHOI AND ASSOCIATES LTD
ARCHITECTURE / INTERIOR ARCHITECTURE / RESEARCH
733 BISHOP ST. SUITE 2620 HONOLULU HI 96813-4016
TEL 808 533 8880 FAX 808 599 3769 www.ferrarochoi.com

R. STANLEY DUNCAN ★ LICENSED PROFESSIONAL LANDSCAPE ARCHITECT No. 5815 ★ U.S.A. HAWAII

EXPIRATION DATE OF LICENSE: 4/30/2021

SIGNATURE

THIS WORK WAS PREPARED BY ME, OR UNDER MY SUPERVISION AND CONSTRUCTION OF THIS PROJECT WILL BE SUPERVISED BY ME (HRS 464-1 AND HAR 16-215 DEPARTMENT OF COMMERCE AND CONSUMER AFFAIRS)

# WAILUKU CIVIC COMPLEX PHASE 1B

100% FINAL DESIGN

NOT FOR CONSTRUCTION

SHEET TITLE: LANDSCAPE SECTIONS (BASE BID)

CADD FILE:

REVISIONS:

PROJECT: 2017-001

DRAWN: PBR

DATE: 7/25/2019

PHASE 1B

SHEET L401

OF SHEETS

COPYRIGHT PROTECTED: THIS WORK IS PROTECTED UNDER THE 1990 ARCHITECTURAL WORKS COPYRIGHT PROTECTION ACT

NOTES:

1. MEDIUM BRUSH BROOM SWEEP SHALL BE PERPENDICULAR TO DIRECTION OF TRAVEL (TYP).
2. CONTROL JOINTS SHALL BE SAWCUT; REFER TO CIVIL SPECIFICATIONS FOR EXPANSION JOINTS AND CONTROL JOINTS SPACING.
3. SEE CIVIL DRAWINGS FOR CONCRETE PAVING LAYOUT PLANS & REINFORCEMENT DETAILS (TYP.).
4. ALL WALKWAY AND DRIVEWAY SURFACES SHALL HAVE A MIN. WET DYNAMIC COEFFICIENT OF FRICTION (DCOF) OF 0.6 FOR LEVEL SURFACES AND 0.8 FOR SLOPED SURFACES GREATER THAN 5%.
5. CONTRACTOR SHALL PROVIDE AT MIN. FOUR 4FT X 4FT REPRESENTATIVE MOCK-UPS FOR ALL STANDARD PORTLAND CENTER CONCRETE PAVING FINISHES FOR LANDSCAPE ARCHITECT ACCEPTANCE PRIOR TO INSTALLATION. WHEN ACCEPTED, MOCK-UP WILL DEMONSTRATE MINIMUM STANDARD FOR THE WORK.
6. CONTRACTOR SHALL PERFORM WET DCOF TESTING OF MOCK-UP IN THE PRESENCE OF THE LANDSCAPE ARCHITECT (LA) AND OWNER'S REPRESENTATIVE. CONTRACTOR SHALL SUBMIT REPORT OF WET DCOF TEST RESULTS.
7. FOR CONCRETE PAVING ACCEPTANCE, CONTRACTOR SHALL PERFORM WET DCOF TEST AT VARIOUS PAVING & RAMP LOCATIONS IN THE PRESENCE OF THE LA AND OWNER'S REPRESENTATIVE. TEST RESULTS SHALL MEET OR EXCEED TEST RESULTS PERFORMED ON MOCK-UP.
8. PHOTOS OF PATTERN EXAMPLES PROVIDED ARE FOR REFERENCE ONLY.

PATTERN EXAMPLE ONLY:
MEDIUM BRUSH BROOM FINISH

PATTERN EXAMPLE ONLY:
SWEPT W/ MEDIUM ROCK SALT FINISH

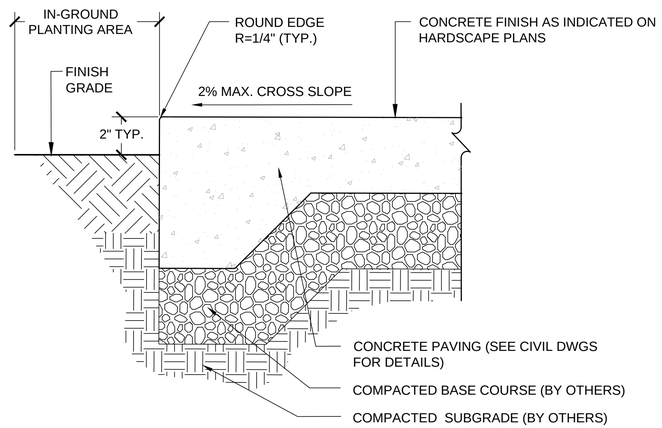


## 2 CONCRETE PAVING FINISH DETAIL

N.T.S.

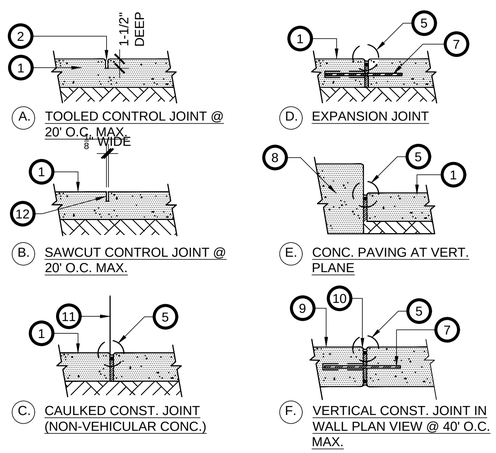


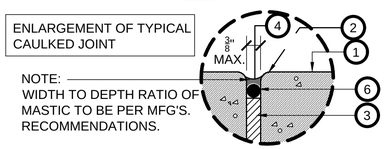


LEGEND

1. CONCRETE OR STONE PAVING.
2. 1/8" TOOLED RADIUS EDGE, TYPICAL.
3. PREMOLDED EXPANSION JOINT FILLER PER SPECIFICATIONS.
4. MASTIC SEALANT, COLOR TO MATCH ADJACENT PAVING, TOP WITH FINELY CRUSHED INTERGRAL COLORED CONCRETE PRIOR TO STAINING.
5. CAULKED JOINT, SEE DETAIL ENLARGEMENT ABOVE.
6. FOAM BACKER ROD
7. STEEL SLIP DOWELS @ 24" O.C.
8. CONCRETE CURB, PLANTER WALL, BLDG. WALL, ROCKWORK, ETC.
9. CONCRETE WALL SECTION
10. VERTICAL EXPANSION JOINT AT 20' O.C. MAX., ALIGN WITH ADJACENT HORIZONTAL EXPANSION JOINTS WHERE POSSIBLE.
11. CURB OR WALL FACE WHERE EDGE CONDITION EXISTS.
12. DEPTH OF CUT TO BE 1/4 THE DEPTH OF SLAB PLUS 1/4" *MAKE ALL SAW CUTS WITHIN 12 HRS. OF CONCRETE POUR.

## 1 TYPICAL CONCRETE JOINTS

N.T.S.

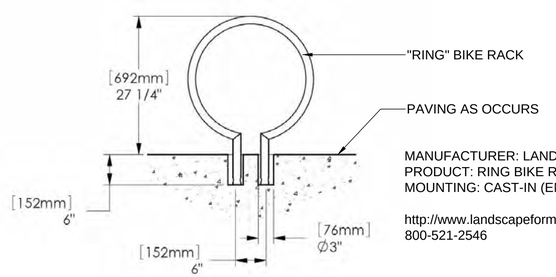


MANUFACTURER: LANDSCAPEFORMS
PRODUCT: RING BIKE RACK
MOUNTING: CAST-IN (EMBEDDED)

http://www.landscapeforms.com/
800-521-2546

NOTES:

1. MATERIAL: STAINLESS STEEL
2. FINISH: ELECTROPOLISH
3. EDGE THICKNESS: 1"
4. "RING" BIKE RACK BY LANDSCAPE FORMS OR ACCEPTABLE EQUAL.
5. CONTRACTOR SHALL INSTALL BIKE RACKS AS SHOWN ON HARDSCAPE PLANS, VERIFY THAT SPACING & CLEARANCES MEET RECOMMENDATIONS SET FORTH BY THE ASSOCIATION OF PEDESTRIAN AND BICYCLE PROFESSIONALS (APBP) PRIOR TO DRILLING.
6. CONTRACTOR SHALL INSTALL BIKE RACK PER MANUFACTURER'S WRITTEN INSTRUCTIONS.
7. CONTRACTOR SHALL PROTECT BIKE RACK FINISH DURING INSTALLATION.

## 3 TYPICAL BIKE RACK INSTALLATION DETAIL

N.T.S.

MANUFACTURER: URBAN ACCESSORIES
PRODUCT: DG-4 BOLLARD
MOUNTING: CAST-IN

http://www.urbanaccessories.com/
Hawaii Sales Rep: Lea McCormick
206-661-8320
lea@highwireus.com

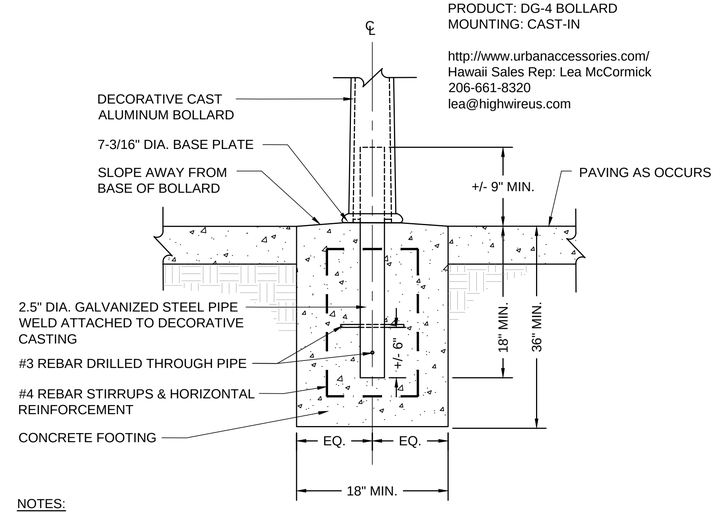


NOTES:

1. BOLLARD MATERIAL: 100% RECYCLED ALUMINUM; ASTM B261.
2. BOLLARD FINISH: POWDER COAT WITH ZINC-RICH PRIMER (REFER TO SITE FURNISHINGS SCHEDULE ON L101 FOR COLOR).
3. "DG4 BOLLARD" BY URBAN ACCESSORIES OR ACCEPTABLE EQUAL.
4. CONTRACTOR SHALL INSTALL BOLLARD AS SHOWN ON HARDSCAPE PLANS, VERIFY LOCATION PRIOR TO INSTALLATION.
5. CONTRACTOR SHALL INSTALL & SET BOLLARD PLUMB PER MANUFACTURER'S WRITTEN INSTRUCTIONS.
6. CONTRACTOR SHALL PROTECT BOLLARD FINISH DURING INSTALLATION.

## 4 TYPICAL BOLLARD INSTALLATION DETAIL

N.T.S.


FERRARO CHOI
FERRARO CHOI AND ASSOCIATES LTD
ARCHITECTURE / INTERIOR ARCHITECTURE / RESEARCH
733 BISHOP ST. SUITE 2620 HONOLULU HI 96813-4016
TEL 808 533 8880 FAX 808 599 3769 www.ferrarochoi.com


STANLEY DUNCAN LICENSED PROFESSIONAL LANDSCAPE ARCHITECT No. 5815 HAWAII U.S.A.

SIGNATURE: R. Stanley Duncan
EXPIRATION DATE OF LICENSE: 4/30/2021

THIS WORK WAS PREPARED BY ME, OR UNDER MY SUPERVISION AND CONSTRUCTION OF THIS PROJECT WILL BE SUPERVISED BY ME OR UNDER MY SUPERVISION. (HRS 464-4 & HAR 16-115 DEPARTMENT OF COMMERCE AND CONSUMER AFFAIRS)

WAILUKU CIVIC COMPLEX PHASE 1B

100% FINAL DESIGN
NOT FOR CONSTRUCTION

SHEET TITLE: HARDSCAPE DETAILS - 1 (BASE BID)

CADD FILE:

REVISIONS:

PROJECT: 2017-001
DRAWN: PBR
DATE: 7/25/2019
PHASE 1B
SHEET L501
OF SHEETS


COPYRIGHT PROTECTED: THIS WORK IS PROTECTED UNDER THE 1990 ARCHITECTURAL WORKS COPYRIGHT PROTECTION ACT

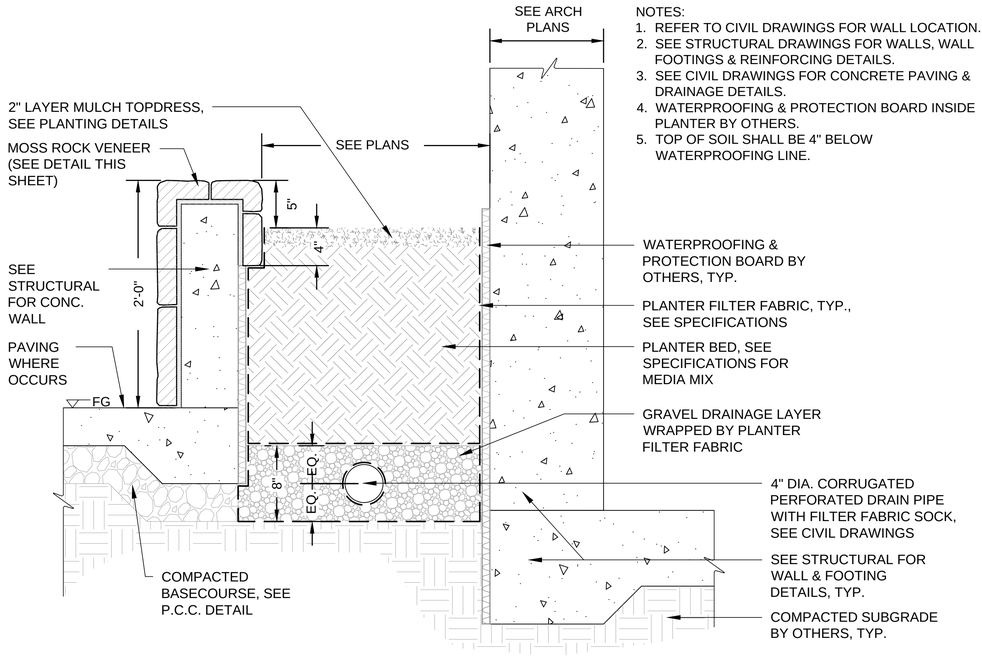


NOTES:
1. REFER TO CIVIL DRAWINGS FOR WALL LOCATION.
2. SEE STRUCTURAL DRAWINGS FOR WALLS, WALL FOOTINGS & REINFORCING DETAILS.
3. SEE CIVIL DRAWINGS FOR CONCRETE PAVING & DRAINAGE DETAILS.
4. WATERPROOFING & PROTECTION BOARD INSIDE PLANTER BY OTHERS.
5. TOP OF SOIL SHALL BE 4" BELOW WATERPROOFING LINE.

## 1 RAISED PLANTER WITH MOSS ROCK VENEER DETAIL

N.T.S.

NOTES:
1. SEE CIVIL DWGS FOR WALL LOCATION; SEE CIVIL DRAWINGS FOR DRAINAGE AND CONCRETE PAVING DETAILS.
2. SEE STRUCTURAL DWGS FOR CONCRETE WALL DETAIL.
3. USE CORNER PIECES AT ALL WALL CORNERS, EDGES, AND TURNS.
4. USE RANDOM PATTERN SO THE VENEER APPEARS NATURAL.
5. DO NOT PLACE VENEER WITH EDGE EXPOSED.
6. DO NOT PLACE LARGE VENEER PIECES ABOVE SMALLER ONES.
7. PROVIDE RECESSED HIDDEN MORTAR JOINTS FOR DRY-STACK APPEARANCE.
8. GROUT & MORTAR COLOR TO MATCH DARKEST ROCK COLOR.
9. CONTRACTOR SHALL PROVIDE A MINIMUM OF (1) 4FTx4FT MOCK-UP WALL ON-SITE FOR LANDSCAPE ARCHITECT APPROVAL PRIOR TO CONSTRUCTION. WHEN ACCEPTED, MOCK-UP SHALL DEMONSTRATE MINIMUM STANDARD OF WORK.

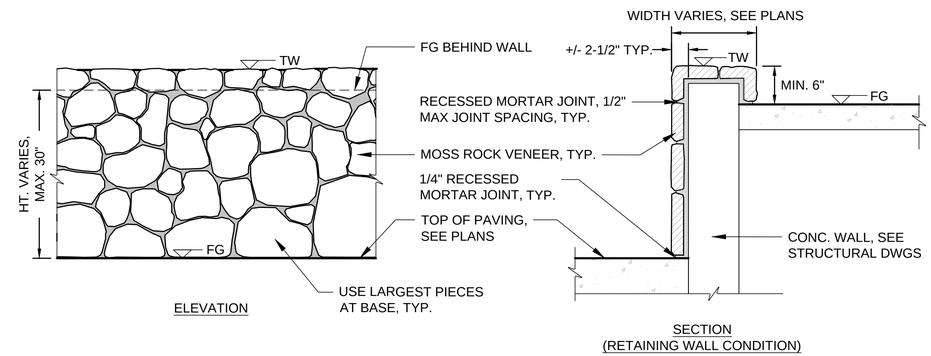


## 2 MOSS ROCK VENEER DETAIL

N.T.S.

FERRARO CHOI
FERRARO CHOI AND ASSOCIATES LTD
ARCHITECTURE / INTERIOR ARCHITECTURE / RESEARCH
733 BISHOP ST. SUITE 2620 HONOLULU HI 96813-4016
TEL 808 533 8880 FAX 808 599 3769 www.ferrarochoi.com

STANLEY DUNCAN ★ LICENSED PROFESSIONAL LANDSCAPE ARCHITECT No. 5815 ★ HAWAII U.S.A.

EXPIRATION DATE OF LICENSE: 4/30/2020

SIGNATURE

THIS WORK WAS PREPARED BY ME, OR UNDER MY SUPERVISION AND CONSTRUCTION OF THIS PROJECT WILL BE SUPERVISED BY ME, OR UNDER MY SUPERVISION. (HRS 464-1 & 464-4 COMMERCE AND CONSUMER AFFAIRS)

# WAILUKU CIVIC COMPLEX PHASE 1B

100% FINAL DESIGN

NOT FOR CONSTRUCTION

SHEET TITLE:

HARDSCAPE DETAILS - 2 (BASE BID)

CADD FILE:

PROJECT: 2017-001

REVISIONS:

DRAWN: PBR

DATE: 7/25/2019

PHASE 1B

SHEET L502

OF SHEETS

COPYRIGHT PROTECTED: THIS WORK IS PROTECTED UNDER THE 1990 ARCHITECTURAL WORKS COPYRIGHT PROTECTION ACT

NOTES:
1. PLANTER WALL PAINT COLOR TO MATCH ARCHITECTURAL BUILDING WALL COLOR. REFER TO ARCHITECTURAL PLANS FOR WALL COLOR.
2. EXPANSION JOINT COLOR TO MATCH PAVING COLOR.
3. SEE STRUCTURAL DRAWINGS FOR WALLS, FOOTINGS AND REINFORCING DETAILS.
4. SEE CIVIL DRAWINGS FOR CONCRETE PAVING AND DRAINAGE DETAILS.

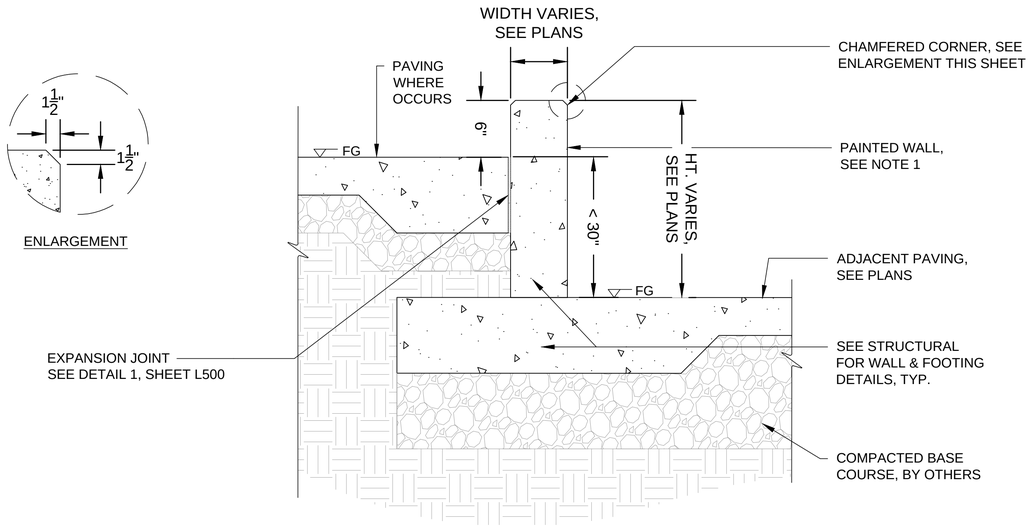


1 TYPICAL LOW CAST IN PLACE CONCRETE RETAINING WALL

SCALE: 1-1/2" = 1'-0"

NOTES:
1. PLANTER WALL PAINT COLOR TO MATCH ARCHITECTURAL BUILDING WALL COLOR. REFER TO ARCHITECTURAL PLANS FOR WALL COLOR.
2. EXPANSION JOINT COLOR TO MATCH PAVING COLOR.
3. SEE STRUCTURAL DRAWINGS FOR WALLS, FOOTINGS AND REINFORCING DETAILS.
4. SEE CIVIL DRAWINGS FOR CONCRETE PAVING AND DRAINAGE DETAILS.
5. WATERPROOFING AND PROTECTION BOARD INSIDE PLANTER BY OTHERS.
6. TOP OF SOIL SHALL BE 4" BELOW WATERPROOFING LINE.

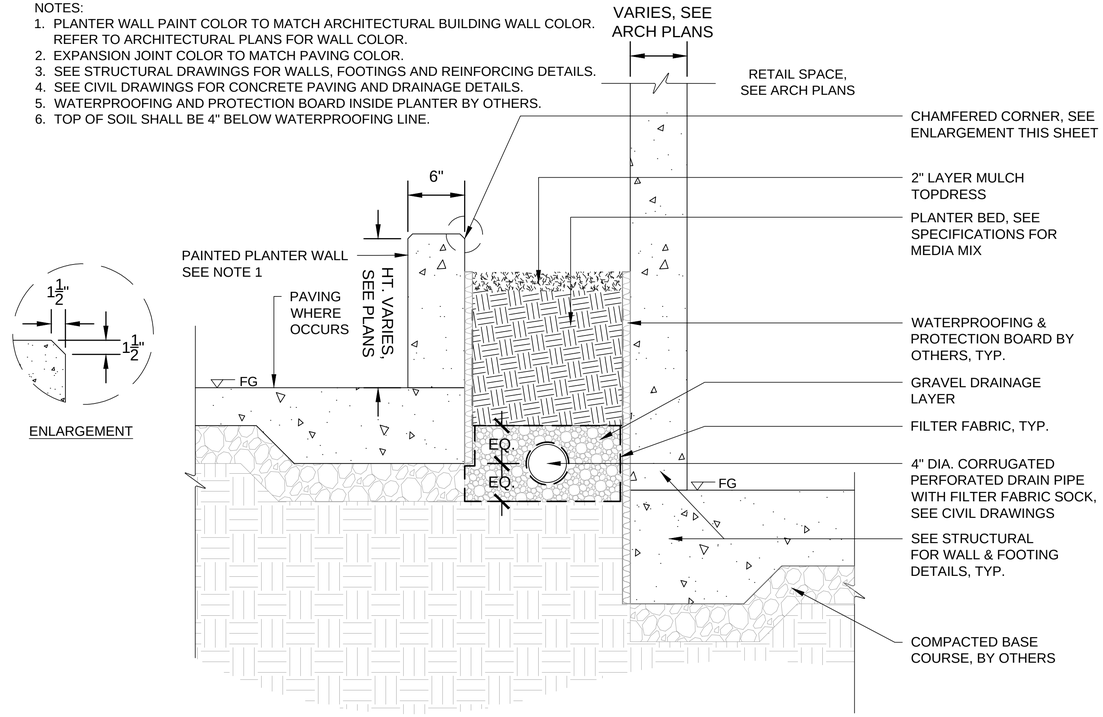


2 TYPICAL LOW CAST IN PLACE CONCRETE PLANTER WALL

SCALE: 1-1/2" = 1'-0"


FERRARO CHOI
FERRARO CHOI AND ASSOCIATES LTD
ARCHITECTURE / INTERIOR ARCHITECTURE / RESEARCH
733 BISHOP ST. SUITE 2620 HONOLULU HI 96813-4016
TEL 808 533 8880 FAX 808 599 3769 www.ferrarochoi.com


STANLEY DUNCAN ★ LICENSED PROFESSIONAL LANDSCAPE ARCHITECT No. 5815 ★ HAWAII U.S.A.

EXPIRATION DATE OF LICENSE: 4/30/2020

SIGNATURE

THIS WORK WAS PREPARED BY ME OR UNDER MY SUPERVISION AND CONSTRUCTION OF THIS PROJECT WILL BE SUPERVISED BY ME (HRS 464-1 AND 464-4 AS AMENDED BY COMMERCE AND CONSUMER AFFAIRS)

# WAILUKU CIVIC COMPLEX PHASE 1B

100% FINAL DESIGN

NOT FOR CONSTRUCTION

SHEET TITLE:

HARDSCAPE DETAILS - 3 (BASE BID)

CADD FILE:

REVISIONS:

△

△

△

△

△

PROJECT: 2017-001

DRAWN: PBR

DATE: 7/25/2019

PHASE 1B SHEET L503 OF SHEETS


COPYRIGHT PROTECTED: THIS WORK IS PROTECTED UNDER THE 1990 ARCHITECTURAL WORKS COPYRIGHT PROTECTION ACT

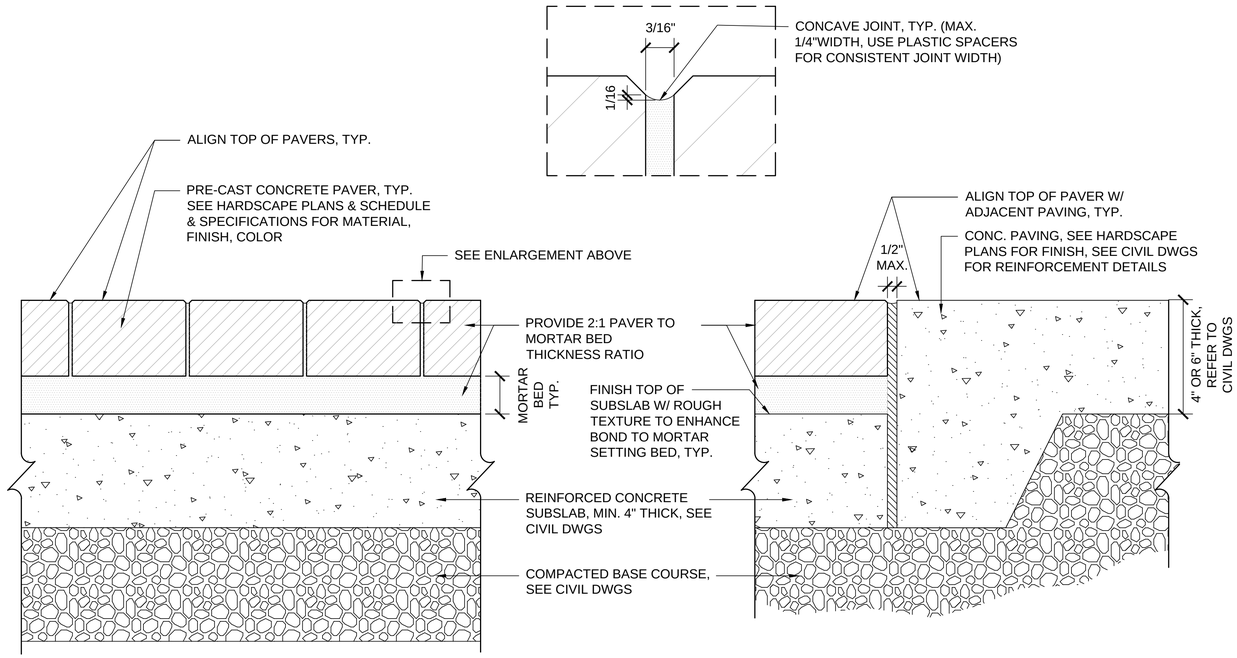


1 PAVER DETAIL
N.T.S.

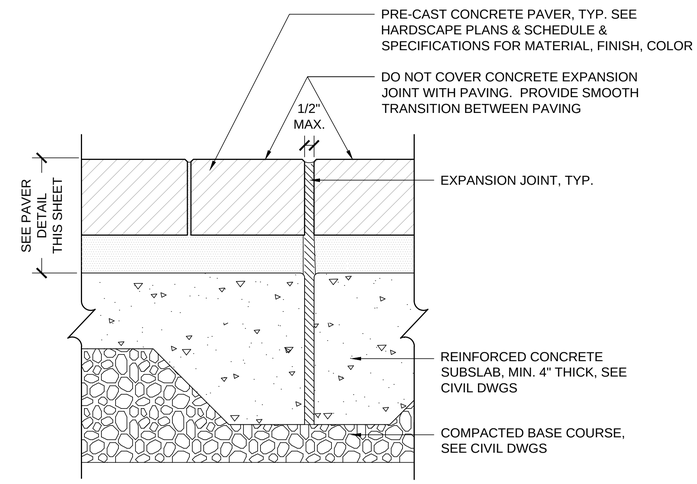


2 PAVER TO PAVER CONNECTION OVER EXPANSION JOINT
N.T.S.

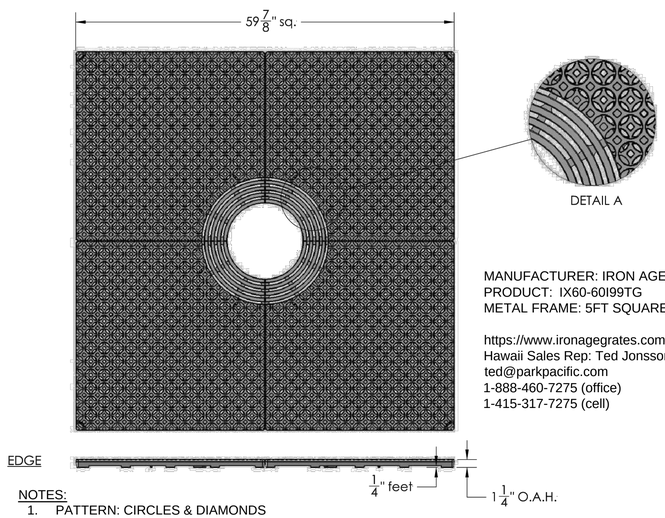


MANUFACTURER: IRON AGE DESIGNS
PRODUCT: IX60-60I99TG
METAL FRAME: 5FT SQUARE "E" FRAME

https://www.ironagegrates.com/
Hawaii Sales Rep: Ted Jonsson (ParkPacific, Inc.)
ted@parkpacific.com
1-888-460-7275 (office)
1-415-317-7275 (cell)

NOTES:
1. PATTERN: CIRCLES & DIAMONDS
2. MATERIAL: CAST IRON (4 PIECES)
3. FINISH: BAKED ON OIL
4. EDGE THICKNESS: 1.25"
5. ADA COMPLIANT: NO OPENINGS GREATER THAN 1/2".
6. INTERLAKEN TREE GRATE WITH BAKED ON OIL FINISH BY IRON AGE DESIGNS OR ACCEPTABLE EQUAL. TREE GRATE AND TREE GRATE FRAME SHALL BE PRODUCED BY THE SAME MANUFACTURER, TYP.
7. CONTRACTOR SHALL INSTALL TREE GRATE & METAL FRAME PER MANUFACTURER'S WRITTEN INSTRUCTIONS.
8. CONTRACTOR SHALL PROVIDE MIN. 14" DIA. CENTER OPENING FOR LOULU PALM PLANTING, CUT OFF BREAK OUT RINGS AS NECESSARY TO ENSURE A MIN." OF 2" CLEAR ALL AROUND BETWEEN PALM TRUNK AND GRATE; REFER TO L332 FOR PLANTING & STAKING DETAILS.

3 METAL TREE GRATE 5X5
N.T.S.

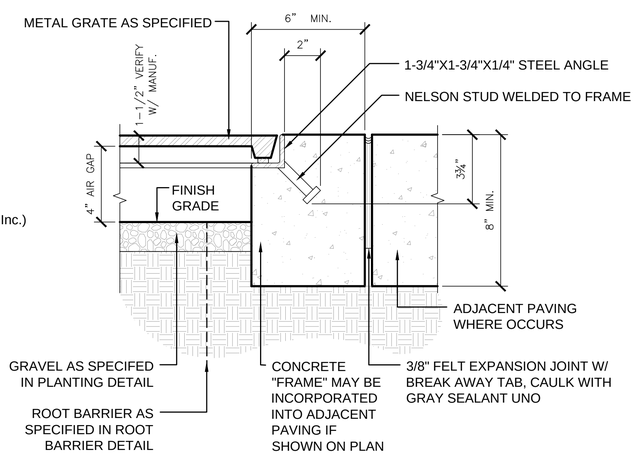


4 METAL TREE GRATE FRAME DETAIL
N.T.S.

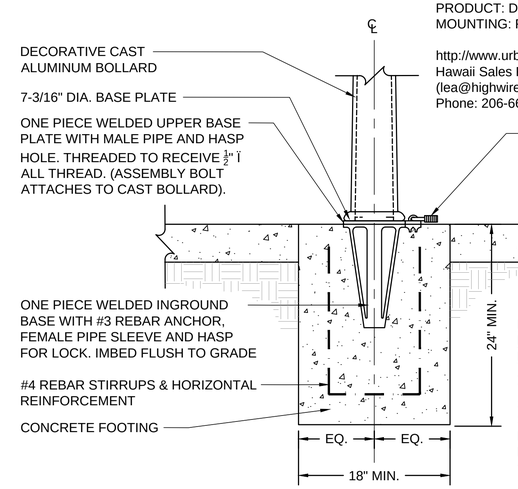


PADLOCK MANUFACTURER: MASTER
PRODUCT: M1KASTS
DESCRIPTION:
Alike-Keyed Padlock, Extended Shackle Type, 1" Shackle Ht., 5/16" Shackle Dia., Silver color, Boron Hardened Steel Shackle, Stainless Steel Body, Square Body Shape 1-1/2" x 1-3/4", 2 Bumpers, 4 Pins in Body, Weather Resistant, Intended for outdoor use.

Available at www.grainger.com at Product #52TG75

NOTES:
1. "DG4 REM / LOCK BOLLARD" BY URBAN ACCESSORIES OR ACCEPTABLE EQUAL.
2. BOLLARD MATERIAL: 100% RECYCLED ALUMINUM; ASTM B261.
3. BOLLARD FINISH: POWDERCOAT W/ ZINC-RICH PRIMER (REFER TO SITE FURNISHINGS SCHEDULE ON L101 FOR COLOR).
4. CONTRACTOR SHALL INSTALL BOLLARD AS SHOWN ON HARDSCAPE PLANS, VERIFY LOCATION PRIOR TO INSTALLATION.
5. CONTRACTOR SHALL INSTALL & SET BOLLARD PLUMB PER MANUFACTURER'S WRITTEN INSTRUCTIONS.
6. CONTRACTOR SHALL PROTECT BOLLARD FINISH DURING INSTALLATION.
7. CONTRACTOR SHALL PROVIDE MIN. ONE PADLOCK PER REMOVABLE BOLLARD WITH MIN. 2 KEYS EACH PADLOCK. CONTRACTOR SHALL ENSURE THAT ALL PADLOCKS ARE KEYED-ALIKE, PROVIDE MIN. 4 MASTER KEYS THAT CAN OPEN ALL PADLOCKS.

5 TYPICAL REMOVABLE BOLLARD INSTALLATION DETAIL
SCALE: NTS


FERRARO CHOI
FERRARO CHOI AND ASSOCIATES LTD
ARCHITECTURE / INTERIOR ARCHITECTURE / RESEARCH
733 BISHOP ST. SUITE 2620 HONOLULU HI 96813-4016
TEL 808 533 8880 FAX 808 599 3769 www.ferrarochoi.com


STANLEY DUNCAN LICENSED PROFESSIONAL LANDSCAPE ARCHITECT No. 5815 HAWAII U.S.A.
EXPIRATION DATE OF LICENSE: 4/30/2021
SIGNATURE
THIS WORK WAS PREPARED BY ME, OR UNDER MY SUPERVISION AND CONSTRUCTION OF THIS PROJECT WILL BE SUPERVISED BY ME OR UNDER MY SUPERVISION. (HRS 464-1 AND COMMERCE AND CONSUMER AFFAIRS)

WAILUKU CIVIC COMPLEX PHASE 1B
100% FINAL DESIGN
NOT FOR CONSTRUCTION

SHEET TITLE: HARDSCAPE DETAILS - 4 (BASE BID/~~DEDUCTIVE ALT. NO. 3~~)

REVISIONS:

PROJECT: 2017-001
DRAWN: PBR
DATE: 7/25/2019
PHASE 1B
SHEET L504
OF SHEETS
CADD FILE:


COPYRIGHT PROTECTED: THIS WORK IS PROTECTED UNDER THE 1990 ARCHITECTURAL WORKS COPYRIGHT PROTECTION ACT

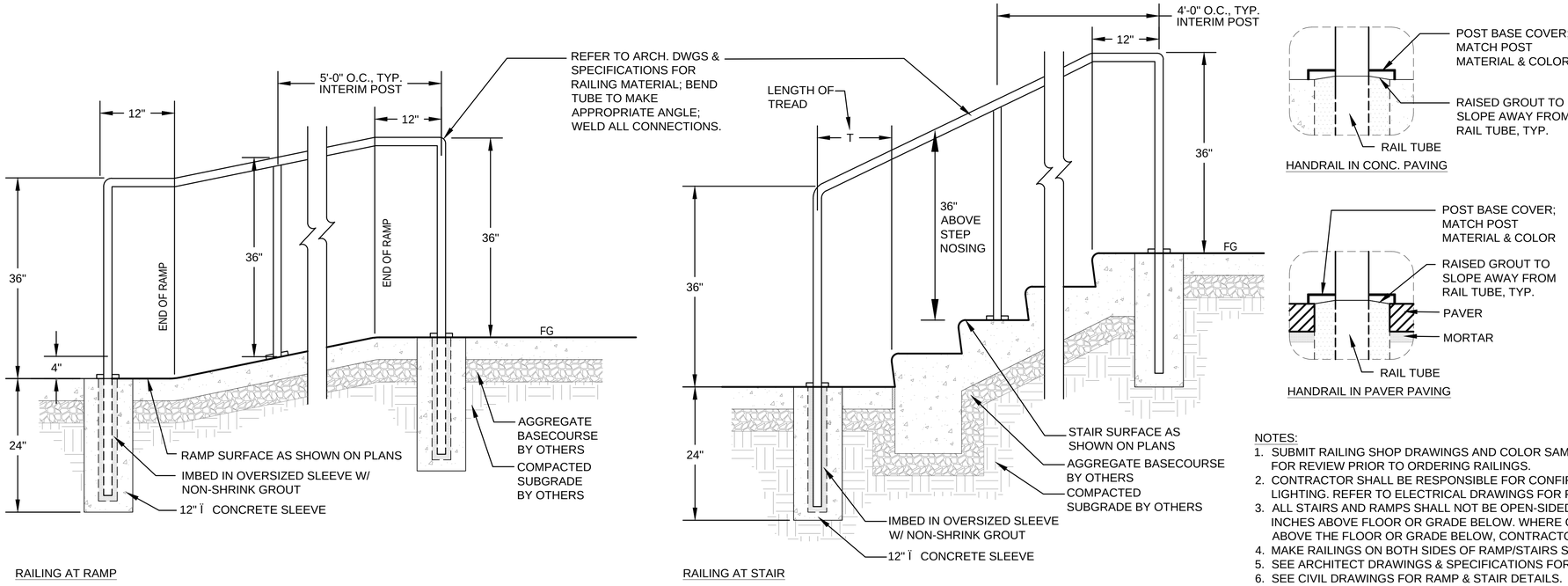


NOTES:
1. SUBMIT RAILING SHOP DRAWINGS AND COLOR SAMPLES TO LANDSCAPE ARCHITECT & ARCHITECT FOR REVIEW PRIOR TO ORDERING RAILINGS.
2. CONTRACTOR SHALL BE RESPONSIBLE FOR CONFIRMING POWER SOURCE FOR HANDRAILS WITH LED LIGHTING. REFER TO ELECTRICAL DRAWINGS FOR POWER AND RELATED WIRING.
3. ALL STAIRS AND RAMPS SHALL NOT BE OPEN-SIDED WHERE GRADE CHANGE IS GREATER THAN 30 INCHES ABOVE FLOOR OR GRADE BELOW. WHERE GRADE CHANGE IS GREATER THAN 30 INCHES ABOVE THE FLOOR OR GRADE BELOW, CONTRACTOR SHALL INSTALL GUARDRAILS WITH HANDRAILS.
4. MAKE RAILINGS ON BOTH SIDES OF RAMP/STAIRS SIMILAR.
5. SEE ARCHITECT DRAWINGS & SPECIFICATIONS FOR RAILING MATERIAL & FINISH.
6. SEE CIVIL DRAWINGS FOR RAMP & STAIR DETAILS.

## 1 TYPICAL RAILING DETAIL

SCALE: NOT TO SCALE

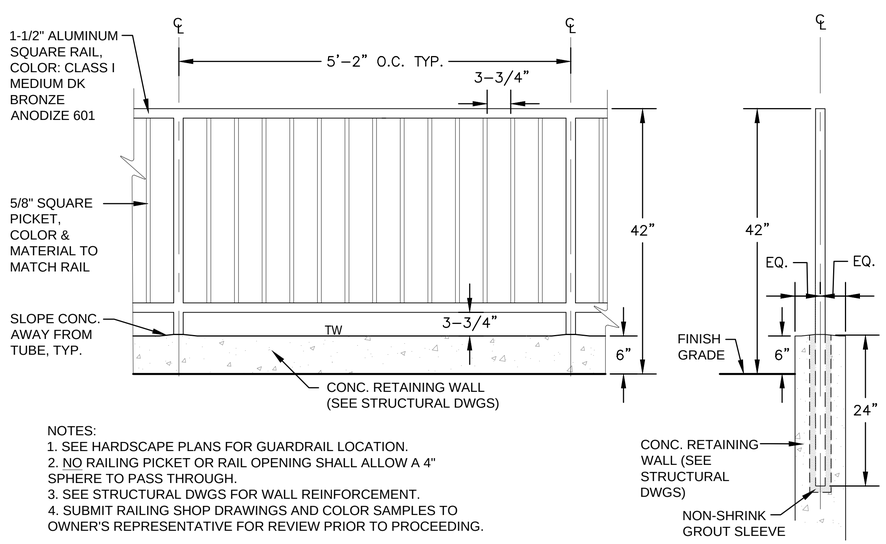


NOTES:
1. SEE HARDSCAPE PLANS FOR GUARDRAIL LOCATION.
2. NO RAILING PICKET OR RAIL OPENING SHALL ALLOW A 4" SPHERE TO PASS THROUGH.
3. SEE STRUCTURAL DWGS FOR WALL REINFORCEMENT.
4. SUBMIT RAILING SHOP DRAWINGS AND COLOR SAMPLES TO OWNER'S REPRESENTATIVE FOR REVIEW PRIOR TO PROCEEDING.

## 2 TYPICAL GUARDRAIL DETAIL

SCALE: NOT TO SCALE

FERRARO CHOI
FERRARO CHOI AND ASSOCIATES LTD
ARCHITECTURE / INTERIOR ARCHITECTURE / RESEARCH
733 BISHOP ST. SUITE 2620 HONOLULU HI 96813-4016
TEL 808 533 8880 FAX 808 599 3769 www.ferrarochoi.com

STANLEY DUNCAN LICENSED PROFESSIONAL LANDSCAPE ARCHITECT No. 5815 HAWAII U.S.A.
EXPIRATION DATE OF LICENSE: 4/30/2021
SIGNATURE
THIS WORK WAS PREPARED BY ME OR UNDER MY SUPERVISION AND CONSTRUCTION OF THIS PROJECT WILL BE SUPERVISED BY ME OR UNDER MY SUPERVISION (HRS CHAPTER 464, COMMERCE AND CONSUMER AFFAIRS)

# WAILUKU CIVIC COMPLEX PHASE 1B

100% FINAL DESIGN
NOT FOR CONSTRUCTION

SHEET TITLE: RAILING DETAILS

CADD FILE:

REVISIONS:
△
△
△
△
△

PROJECT: 2017-001
DRAWN: PBR
DATE: 7/25/2019
PHASE 1B
SHEET L505
OF SHEETS

COPYRIGHT PROTECTED: THIS WORK IS PROTECTED UNDER THE 1990 ARCHITECTURAL WORKS COPYRIGHT PROTECTION ACT

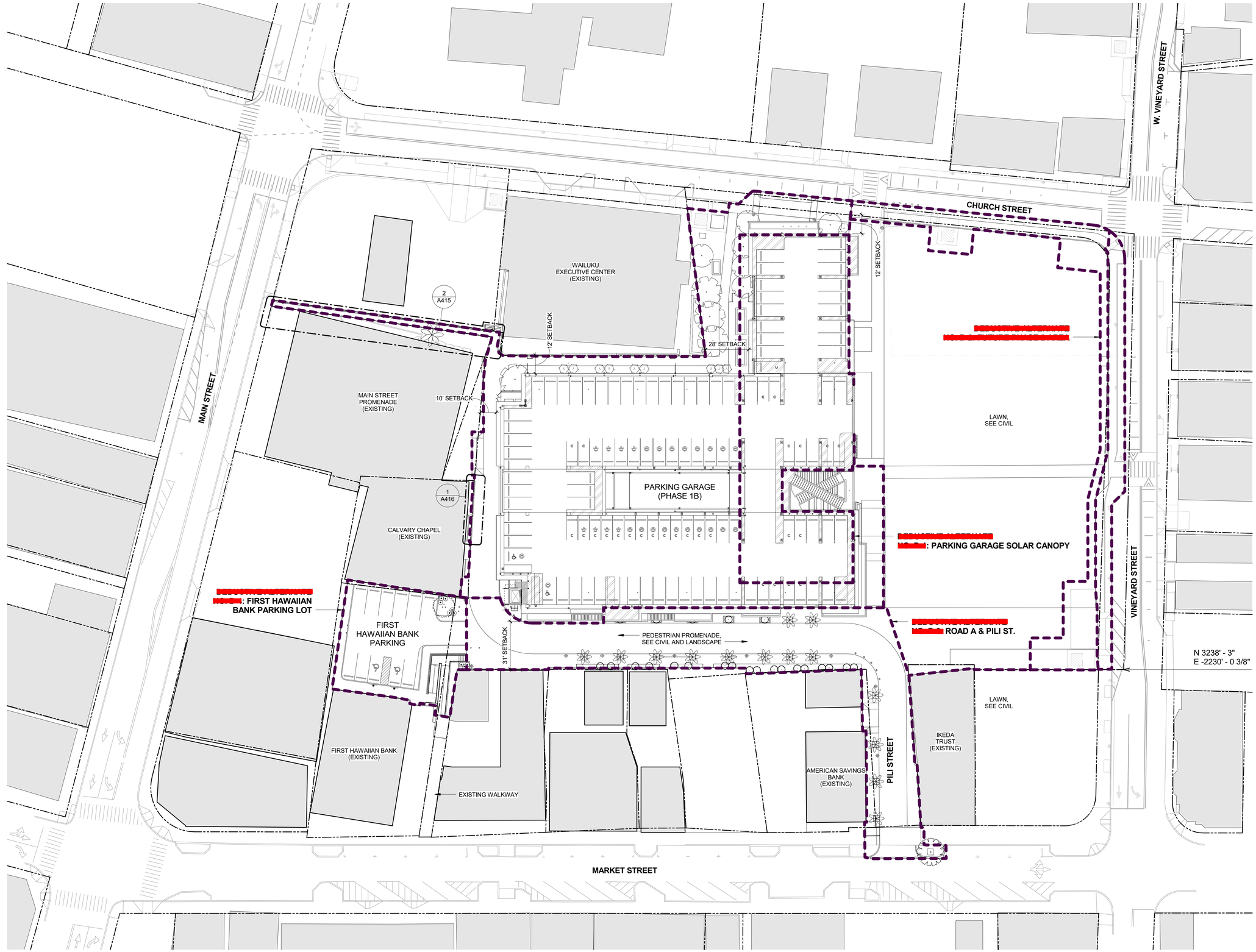


**SITE PLAN**

GENERAL NOTES:

- REFER TO LANDSCAPE SITE PLANS, CIVIL SITE PLANS, AND MEP SITE PLANS FOR MORE INFORMATION.

LEGEND:

PROPERTY LINE

BASE BID / DEDUCTIVE ALTERNATE LIMITS

KEY PLAN:

GRAPHIC SCALE: [1" = 30'-0"]

0' 20' 60'
10' 40'

NORTH ARROW:


FERRARO CHOI

F E R R A R O C H O I A N D A S S O C I A T E S L T D
A R C H I T E C T U R E / I N T E R I O R A R C H I T E C T U R E / R E S E A R C H
1240 A L A M O A N A B L V D . S T E 5 1 0 . H O N O L U L U , H I 9 6 8 1 4
T E L 8 0 8 5 3 3 8 8 8 0 F A X 8 0 8 5 9 9 3 7 6 9 w w w . f e r r a r o c h o i . c o m


LICENSE EXPIRATION DATE 4/30/20

SIGNATURE

THIS WORK WAS PREPARED BY ME OR UNDER MY SUPERVISION AND CONSTRUCTION OF THIS PROJECT WILL BE USED BY THE DIVISION OF CONSUMER AFFAIRS (DCA) DEPARTMENT OF COMMERCE AND CONSUMER AFFAIRS)

# WAILUKU CIVIC COMPLEX PHASE 1B

100% FINAL DESIGN

NOT FOR CONSTRUCTION

SHEET TITLE: SITE PLAN

REVISIONS:

CADD FILE:

PROJECT: 2017-001

DRAWN: FCA

DATE: 7/25/2019

PHASE: 1B

SHEET: A100

OF SHEETS


C O P Y R I G H T P R O T E C T E D : T H I S W O R K I S P R O T E C T E D U N D E R T H E 1 9 9 0 A R C H I T E C T U R A L W O R K S C O P Y R I G H T P R O T E C T I O N A C T

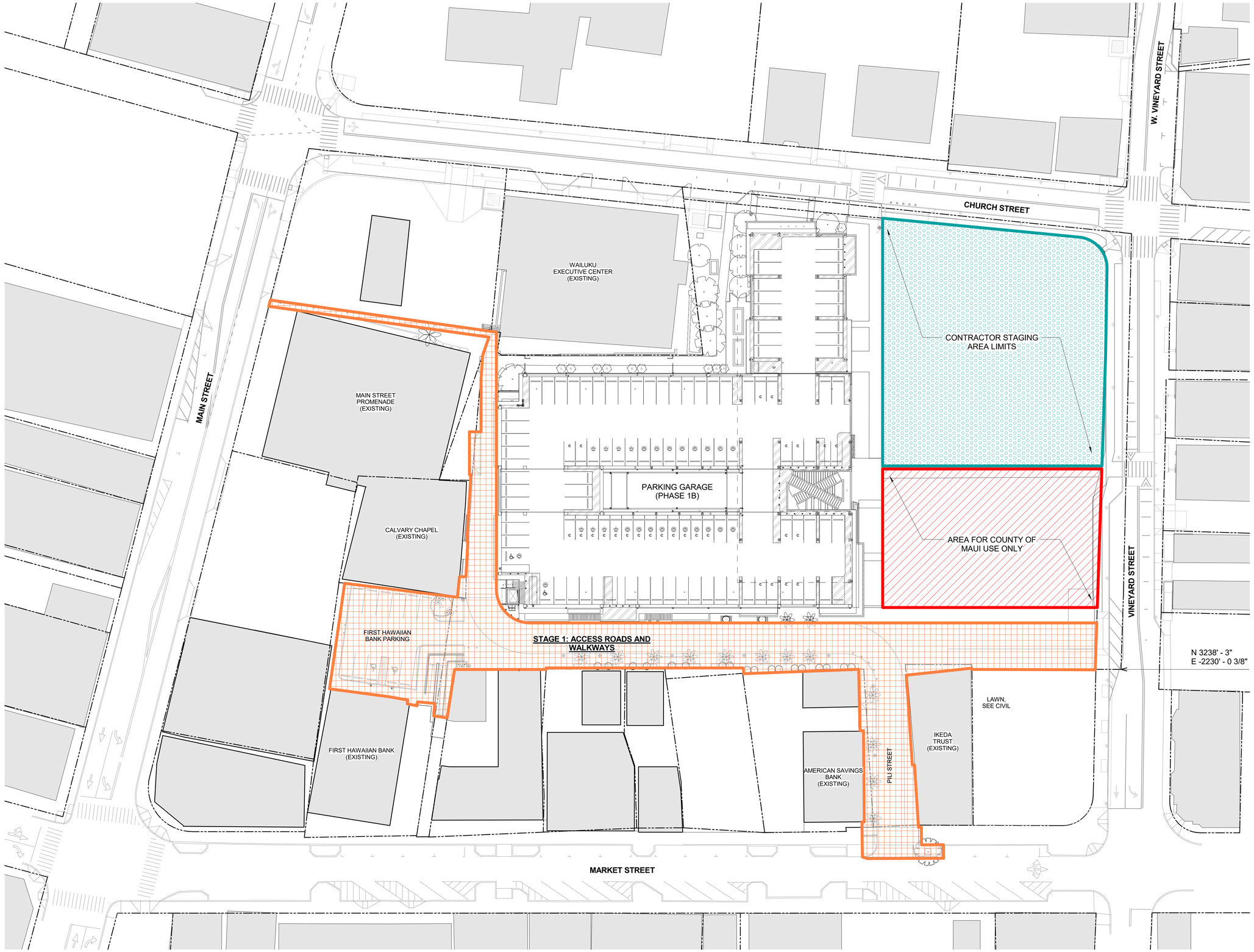


**STAGING PLAN**

GENERAL NOTES:

* .

LEGEND:

- STAGE 1: ACCESS ROADS AND WALKWAYS
- CONTRACTOR STAGING AREA LIMITS
- AREA FOR COUNTY OF MAUI USE ONLY

KEY PLAN:

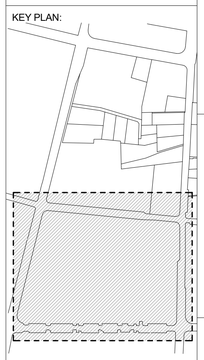

GRAPHIC SCALE: [1" = 30'-0"]

0' 20' 60'
10' 40'

NORTH ARROW:

N

FERRARO CHOI

F E R R A R O C H O I A N D A S S O C I A T E S L T D
A R C H I T E C T U R E / I N T E R I O R A R C H I T E C T U R E / R E S E A R C H
1240 A L A M O A N A B L V D . S T E 5 1 0 . H O N O L U L U , H I 9 6 8 1 4
T E L 8 0 8 5 3 3 8 8 8 0 F A X 8 0 8 5 9 9 3 7 6 9 w w w . f e r r a r o c h o i . c o m

SIGNATURE

LICENSE EXPIRATION DATE 4/30/20

THIS WORK WAS PREPARED BY ME OR UNDER MY SUPERVISION AND CONSTRUCTION OF THIS PROJECT WILL BE ADMINISTERED BY ME OR UNDER MY SUPERVISION. (IN THE DEPARTMENT OF COMMERCE AND CONSUMER AFFAIRS)

# WAILUKU CIVIC COMPLEX PHASE 1B

100% FINAL DESIGN

NOT FOR CONSTRUCTION

SHEET TITLE: WORK SEQUENCE AND STAGING LIMITS

REVISIONS:

CADD FILE:

PROJECT: 2017-001

DRAWN: FCA

DATE: 7/25/2019

PHASE: 1B

SHEET: A100A

OF SHEETS

C O P Y R I G H T P R O T E C T E D : T H I S W O R K I S P R O T E C T E D U N D E R T H E 1 9 9 0 A R C H I T E C T U R A L W O R K S C O P Y R I G H T P R O T E C T I O N A C T

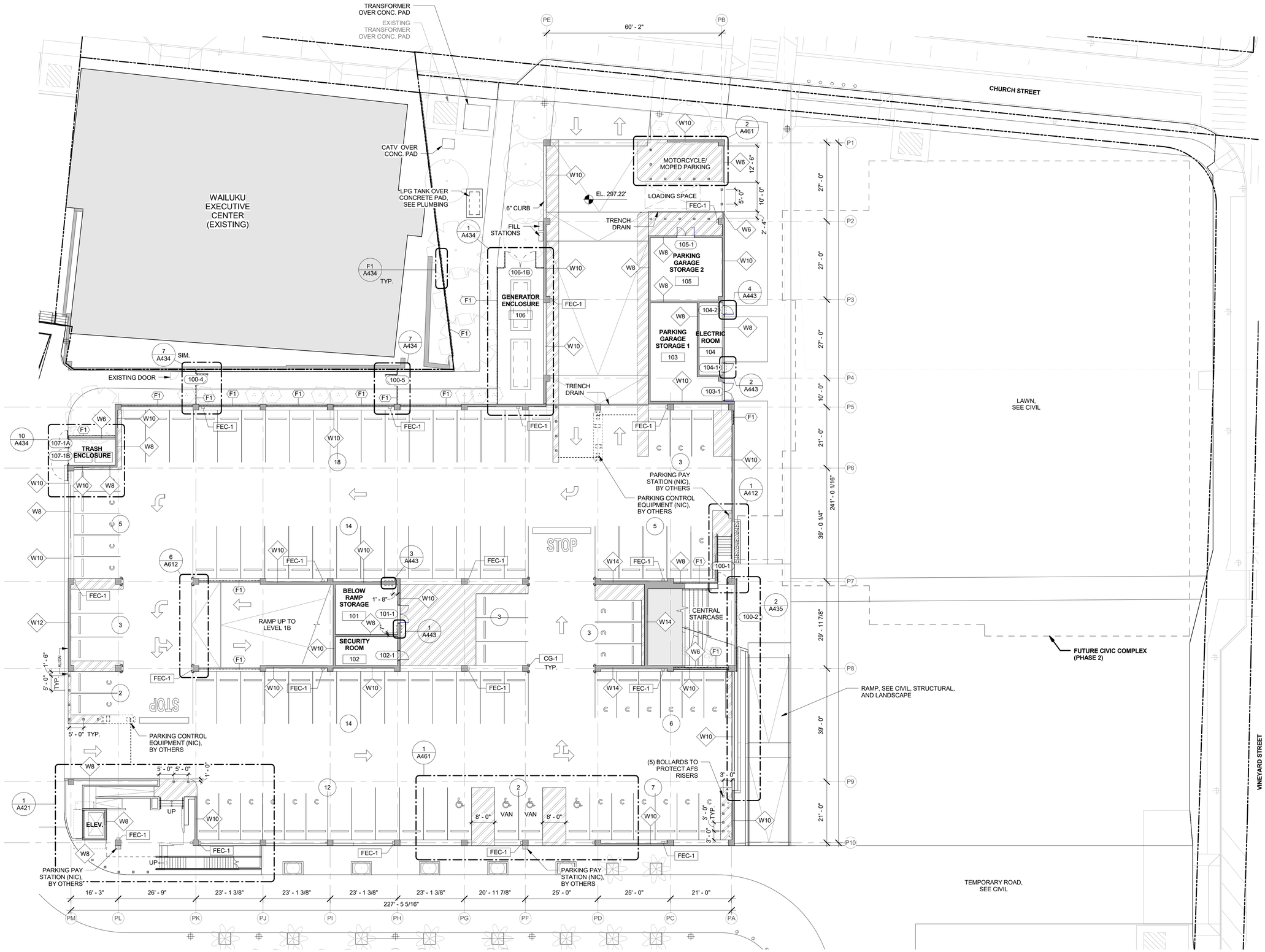


## OVERALL BUILDING PLANS

GENERAL NOTES:

- EXTERIOR DIMENSIONS ARE TO FACE OF STUD, FACE OF CONCRETE/MASONRY, COLUMN CENTERLINE, OR CENTERLINE OF WINDOW U.O.N.
- INTERIOR DIMENSIONS ARE TO FACE OF STUD, FACE OF CONCRETE/MASONRY, OR COLUMN CENTERLINE U.O.N.
- DIMENSIONS DESIGNATED AS "CLEAR" SHALL BE MAINTAINED.
- MAINTAIN CONTINUITY OF RATED PARTITIONS AT HEAD AND BOTTOM OF PARTITION AND AT JOINTS WITH DISSIMILAR PARTITIONS WITH LISTED JOINT ASSEMBLIES.
- WHERE TWO DIFFERING PARTITION TYPES ABUT ALONG A CONTINUOUS LINE, THE CONTINUOUS FINISHED SURFACE OF THESE PARTITIONS SHALL ALIGN U.O.N.
- WHERE DOORS ARE NOT SPECIFICALLY LOCATED, PROVIDE A HINGE-SIDE JAMB DIMENSION OF 4" FROM DOOR OPENING TO ADJACENT PERPENDICULAR PARTITION.
- WHERE MECHANICAL DUCTWORK PENETRATES A COMPONENT OF THE FIRE-RATED ASSEMBLY, PROVIDE FIRE AND/OR SMOKE DAMPERS IN ACCORDANCE WITH IBC CHAPTER 7.

**LEVEL 1A STALL COUNT**

| | |
|---|---|
| 61 | STANDARD |
| 32 | COMPACT |
| 2 | ADA-STANDARD |
| 2 | ADA-VAN |
| 0 | EV-STANDARD |
| 0 | EV-COMPACT |
| 0 | EV-ADA |
| **97** | **TOTAL** |

LEGEND:

PARKING SYMBOLS

- COMPACT CAR STALL*
- ADA STALL*
- ELECTRIC VEHICLE STALL*
- # TOTAL NUMBER OF STALLS WITHIN RUN

*SYMBOL AS DASHED LINES INDICATE FUTURE DESIGNATION OF THESE STALLS

WALL TYPES

- W # CONCRETE WALL
- # = THICKNESS (INCHES)

RAILING / FENCE TYPES

- R1 DECORATIVE W/ ILLUMINATED HANDRAIL
- R2 CABLE
- R2-I CABLE W/ ILLUMINATED HANDRAIL
- R3 HANDRAIL & POST
- R3-I ILLUMINATED HANDRAIL & POST
- R4 VEHICLE BARRIER CABLE W/ WIRE MESH
- R5 VEHICLE BARRIER CABLE W/ METAL SCREEN
- F1 WOODGRAIN ALUMINUM FENCE
- F2 SECURITY FENCE W/ WELDED WIRE MESH

SPECIAL EQUIPMENT

- CG-1 CORNER GUARD
- EV-1 EV CHARGING STATION
- FE-1 FIRE EXTINGUISHER
- FEC-1 FIRE EXTINGUISHER W/ CABINET

KEYPLAN:

GRAPHIC SCALE: [1/16" = 1'-0"]

0' 10' 30' / 5' 20'

NORTH ARROW:

FERRARO CHOI
FERRARO CHOI AND ASSOCIATES LTD
ARCHITECTURE / INTERIOR ARCHITECTURE / RESEARCH
1240 ALA MOANA BLVD. STE 510. HONOLULU, HI 96814
TEL 808 533 8880 FAX 808 599 3769 www.ferrarochoi.com

LICENSE EXPIRATION DATE 4/30/20

SIGNATURE

THIS WORK WAS PREPARED BY ME OR UNDER MY SUPERVISION AND CONSTRUCTION OF THIS PROJECT WILL BE UNDERTAKEN IN ACCORDANCE WITH THE DEPARTMENT OF COMMERCE AND CONSUMER AFFAIRS

# WAILUKU CIVIC COMPLEX PHASE 1B

100% FINAL DESIGN

NOT FOR CONSTRUCTION

SHEET TITLE: OVERALL FLOOR PLAN - LEVEL 1A

CADD FILE:

REVISIONS:

PROJECT: 2017-001

DRAWN: FCA

DATE: 7/25/2019

PHASE: 1B

SHEET: A101A

OF SHEETS

COPYRIGHT PROTECTED: THIS WORK IS PROTECTED UNDER THE 1990 ARCHITECTURAL WORKS COPYRIGHT PROTECTION ACT

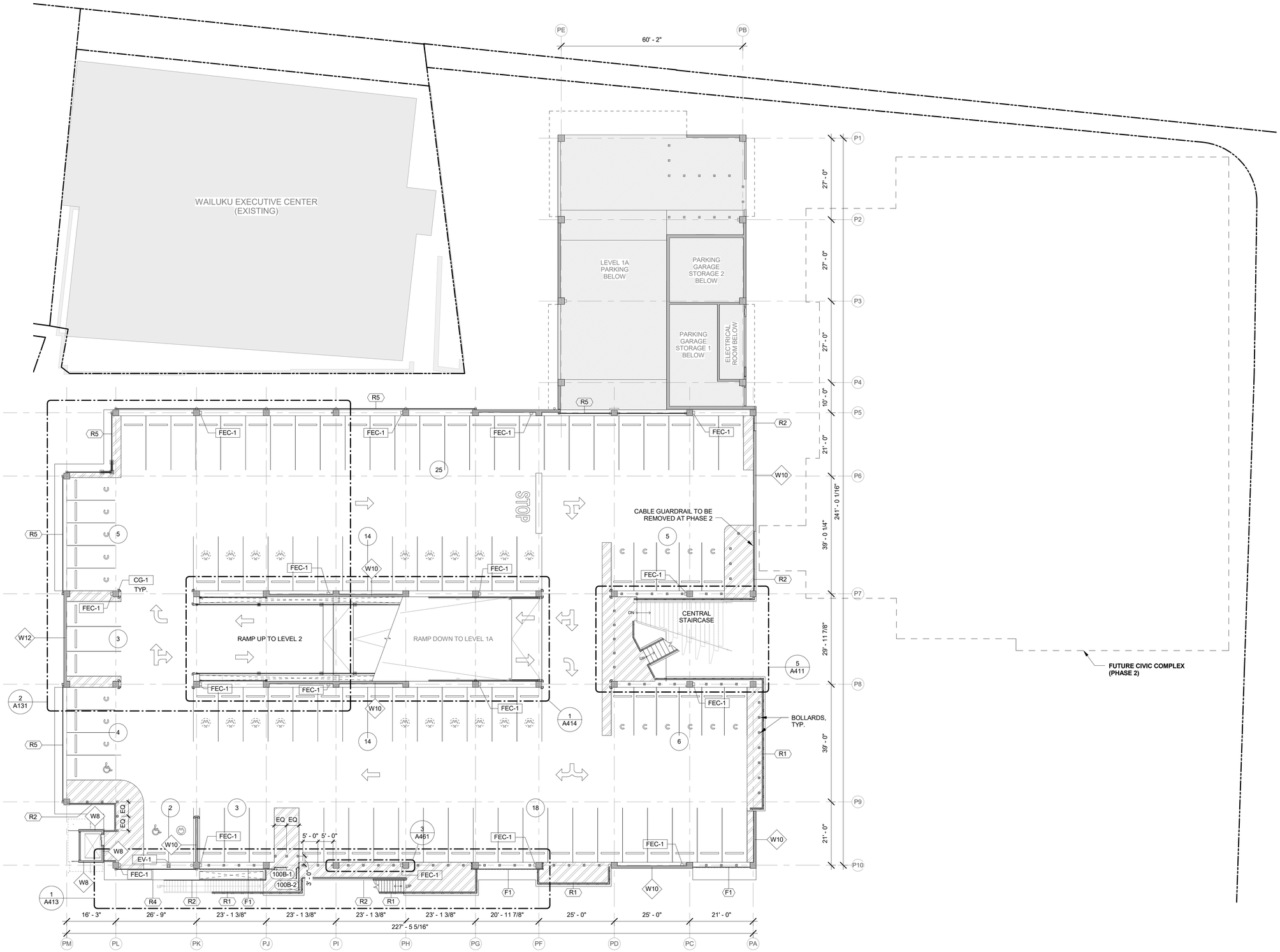


## OVERALL BUILDING PLANS

GENERAL NOTES:

- EXTERIOR DIMENSIONS ARE TO FACE OF STUD, FACE OF CONCRETE/MASONRY, COLUMN CENTERLINE, OR CENTERLINE OF WINDOW U.O.N.
- INTERIOR DIMENSIONS ARE TO FACE OF STUD, FACE OF CONCRETE/MASONRY, OR COLUMN CENTERLINE U.O.N.
- DIMENSIONS DESIGNATED AS "CLEAR" SHALL BE MAINTAINED.
- MAINTAIN CONTINUITY OF RATED PARTITIONS AT HEAD AND BOTTOM OF PARTITION AND AT JOINTS WITH DISSIMILAR PARTITIONS WITH LISTED JOINT ASSEMBLIES.
- WHERE TWO DIFFERING PARTITION TYPES ABUT ALONG A CONTINUOUS LINE, THE CONTINUOUS FINISHED SURFACE OF THESE PARTITIONS SHALL ALIGN U.O.N.
- WHERE DOORS ARE NOT SPECIFICALLY LOCATED, PROVIDE A HINGE-SIDE JAMB DIMENSION OF 4" FROM DOOR OPENING TO ADJACENT PERPENDICULAR PARTITION.
- WHERE MECHANICAL DUCTWORK PENETRATES A COMPONENT OF THE FIRE-RATED ASSEMBLY, PROVIDE FIRE AND/OR SMOKE DAMPERS IN ACCORDANCE WITH IBC CHAPTER 7.

**LEVEL 1B STALL COUNT**

| | |
|---|---|
| 77 | STANDARD |
| 19 | COMPACT |
| 2 | ADA-STANDARD |
| 0 | ADA-VAN |
| 1 | EV-STANDARD |
| 0 | EV-COMPACT |
| 0 | EV-ADA |
| **99** | **TOTAL** |

LEGEND:

PARKING SYMBOLS

- COMPACT CAR STALL*
- ADA STALL*
- ELECTRIC VEHICLE STALL*
- # TOTAL NUMBER OF STALLS WITHIN RUN

*SYMBOL AS DASHED LINES INDICATE FUTURE DESIGNATION OF THESE STALLS

WALL TYPES

- W # CONCRETE WALL

# = THICKNESS (INCHES)

RAILING / FENCE TYPES

- R1 DECORATIVE W/ ILLUMINATED HANDRAIL
- R2 CABLE
- R2-I CABLE W/ ILLUMINATED HANDRAIL
- R3 HANDRAIL & POST
- R3-I ILLUMINATED HANDRAIL & POST
- R4 VEHICLE BARRIER CABLE W/ WIRE MESH
- R5 VEHICLE BARRIER CABLE W/ METAL SCREEN
- F1 WOODGRAIN ALUMINUM FENCE
- F2 SECURITY FENCE W/ WELDED WIRE MESH

SPECIAL EQUIPMENT

- CG-1 CORNER GUARD
- EV-1 EV CHARGING STATION
- FE-1 FIRE EXTINGUISHER
- FEC-1 FIRE EXTINGUISHER W/ CABINET

KEYPLAN:

GRAPHIC SCALE: [1/16" = 1'-0"]

0' 5' 10' 20' 30'

NORTH ARROW:

FERRARO CHOI

F E R R A R O C H O I A N D A S S O C I A T E S L T D
ARCHITECTURE / INTERIOR ARCHITECTURE / RESEARCH
1240 ALA MOANA BLVD. STE 510. HONOLULU, HI 96814
TEL 808 533 8880 FAX 808 599 3769 www.ferrarochoi.com

SIGNATURE

LICENSE EXPIRATION DATE 4/30/20

THIS WORK WAS PREPARED BY ME OR UNDER MY SUPERVISION AND CONSTRUCTION OF THIS PROJECT WILL BE UNDER MY DIRECT SUPERVISION (PER HI DEPARTMENT OF COMMERCE AND CONSUMER AFFAIRS)

# WAILUKU CIVIC COMPLEX PHASE 1B

100% FINAL DESIGN

NOT FOR CONSTRUCTION

SHEET TITLE: OVERALL FLOOR PLAN - LEVEL 1B

CADD FILE:

REVISIONS:

PROJECT: 2017-001

DRAWN: FCA

DATE: 7/25/2019

PHASE: 1B

SHEET: A101B

OF SHEETS

COPYRIGHT PROTECTED: THIS WORK IS PROTECTED UNDER THE 1990 ARCHITECTURAL WORKS COPYRIGHT PROTECTION ACT