APPENDIX K
Preliminary Drainage Report

PRELIMINARY DRAINAGE REPORT FOR KAHANA SUNSET CONDOMINIUM KAHANA, MAUI

Prepared For:

Apartment Owners Association of
Kahana Sunset Condominium Complex
Kahana, Maui

Prepared By:
Marc M. Siah & Associates, Inc.

April 2012

Marc M. Siah & Associates, Inc.

Consulting Civil • Structural • Environmental & Ocean Engineers
820 South Beretania Street, Suite 201, Honolulu, Hawaii 96813

TABLE OF CONTENTS

Marc M. Siah & Associates, Inc.

Consulting Civil • Structural • Environmental & Ocean Engineers
820 South Beretania Street, Suite 201, Honolulu, Hawaii 96813

PRELIMINARY DRAINAGE REPORT FOR KAHANA SUNSET CONDOMINIUM

TABLE OF CONTENTS

SECTION	TITLE	PAGE
1.0	**INTRODUCTION**	
1.1	Project Background and Description	1-1
1.2	Scope of Report	1-3
2.0	**PROJECT CHARACTERISTICS**	
2.1	Description of the Project and Location	2-1
2.2	Land Use	2-3
2.3	Topographic and Geotechnical Features	2-3
2.4	Flora	2-5
2.5	Existing Drainage Infrastructure	2-5
3.0	**DRAINAGE ANALYSIS**	
3.1	Background	3-1
3.2	Flood Hazard Designation	3-1
3.3	Hydrologic Analysis	3-3
3.3.1	Hydrologic Criteria	3-3
3.3.2	Hydrologic Computations - Existing Conditions	3-5
3.3.3	Hydrologic Computations – Future (Finished) Conditions	3-11
4.0	**DRAINAGE INFRASTRUCTURE ADEQUACY EVALUATION**	
4.1	Existing Facilities and Hydraulic Calculations	4-1
4.2	Conclusions and Recommendations	4-3

APPENDICES:

Appendix A – Drainage Calculations

Appendix B – Hydraulic Calculations for Drain Pipes and Channels

TABLE OF CONTENTS
(Continued)

LIST OF FIGURES

FIGURE	TITLE	PAGE
1-1	General Location Map	1-2
1-2	Aerial Vicinity Map	1-4
2-1	Property Tax Map	2-2
2-2	Site Plan	2-4
2-3	Drainage Site Plan	2-8
2-4	Storm Drain Manhole Details	2-9
3-1	Flood Insurance Rate Map	3-2
3-2	Subarea Delineation for Storm Runoff Calculations – Existing Conditions	3-6
3-3	Proposed Site Plan	3-12
3-4	Subarea Delineation for Strom Runoff Calculations - Future Conditions	3-13

TABLE OF CONTENTS
(Continued)

LIST OF TABLES

TABLE	TITLE	PAGE
3-1	Summary of Drainage Calculations Results for the Existing Conditions …….	3-3
3-2	Summary of Drainage Calculations Results for Future (Finished) Conditions ……	3-4
4-1	Hydraulic Parameters for Storm Drain pipes and Channels ……	4-2

SECTION 1.0

INTRODUCTION

Marc M. Siah & Associates, Inc.

Consulting Civil • Structural • Environmental & Ocean Engineers
820 South Beretania Street, Suite 201, Honolulu, Hawaii 96813

SECTION 1.0

INTRODUCTION

1.1 Project Background and Description

The Kahana Sunset Condominium Complex is a multi-unit residential development in west Maui. The project site is located on a land parcel along the shorelines of Keonenui Bay which stretches between Alaeloa Point and Haukoe Point along west Maui coast. A vicinity map indicating the general location of the condominium property is shown in Figure 1-1. The complex is exposed to north swells and trade wind waves which undergo significant transformation as they approach the land and enter the bay. This exposure causes chronic beach erosion and accretion with occasional and at times severe structural damage to foundations and footings of existing protective coastal fortifications requiring reconstruction and repair under emergency conditions. At two recent occasions, specific emergency repairs were necessitated for seawalls fronting Buildings F and Building A, which were performed under emergency permits SM3 2009/0005 and SM3 2003/0001, respectively.

At the present time and in order to address the failure of the retaining wall fronting the BBQ pavilion/shower and to construct additional modifications to the protective seawalls in accordance with the development plan for shore protection, the Kahana Sunset AOAO is in the process of preparing a Master Plan and applying for a Shoreline Setback Variance (SSV) and Special Management Area (SMA) Use Permit. The SSV is necessary to allow additional construction work on the failing seawall and other planned modifications and additions to protective seawalls and coastal structures within the Shoreline Setback Area. In compliance with the State environmental review process, the Kahana Sunset AOAO is also preparing an Environmental Assessment for these modifications and renovations. In line with, and concurrent with these efforts, Marc M. Siah and Associates, Inc. is commissioned by the Kahana Sunset Condominium AOAO, to prepare a preliminary engineering report and drainage report for the Kahana Sunset Condominium Complex.

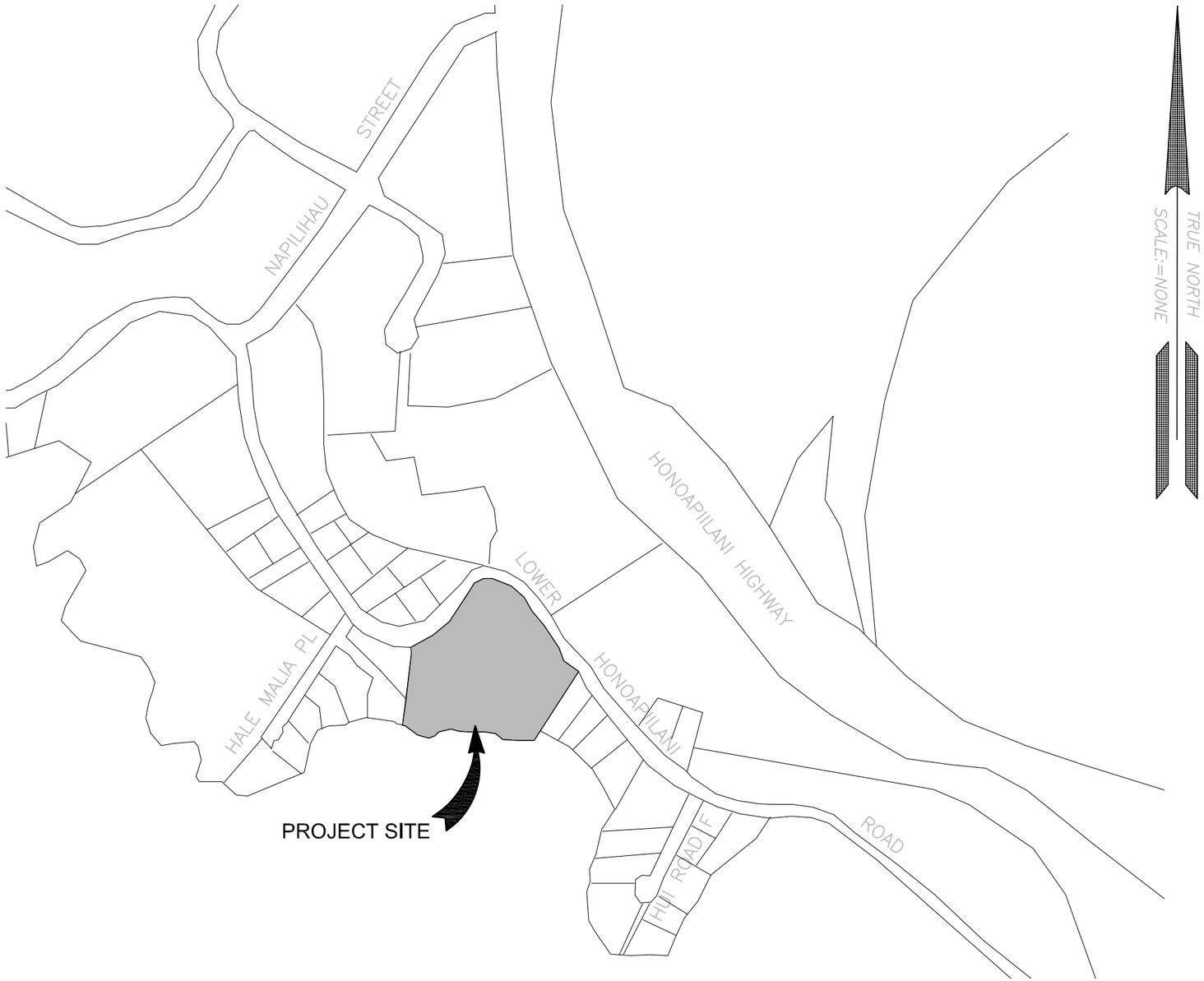

LOCATION MAP

VICINITY MAP

Marc M. Siah & Associates, Inc.
Consulting Civil . Structural . Environmental & Ocean Engineers
810 S. Beretania Street, Suite 201, Honolulu, Hawaii 96813

FIG. 1-1 GENERAL LOCATION MAP
SCALE: NONE

The multi-unit condominium complex sits on a 4.467 acre land parcel and consists of five residential buildings encompassing 79 units of one and two-bedroom apartments, plus a Separate 4-bedroom apartment for the complex's resident manager, and a detached building housing three offices and a laundry room. The condominium complex was constructed in early 1970s which has undergone renovations and additions in later years. Aerial extent of the development is depicted in Figure 1-2.

1.2 Scope of Report

This drainage report describes the existing drainage infrastructure in the Kahana Sunset Condominium Complex and presents hydrological analyses and storm runoff calculations for the exiting conditions in contrast to the future conditions as planned in accordance with the project master plan. The analyses and calculations are performed in accordance with the Title MC-15 of County of Maui, Department of Public Works and Waste Management, Chapter 4, "Rules for the Design of Strom Drainage Facilities in the County of Maui."

The report further identifies inadequacies in the drainage infrastructure and provides recommendations for improvements and upgrading to the existing system.

Figure 1-2 Aerial Vicinity Map

SECTION 2.0

PROJECT CHARACTERISTICS

Marc M. Siah & Associates, Inc.

Consulting Civil • Structural • Environmental & Ocean Engineers
820 South Beretania Street, Suite 201, Honolulu, Hawaii 96813

SECTION 2.0

PROJECT CHARACTERISTICS

2.1 Description of the Project and Location

Kahana Sunset Condominium Complex is located on a 4.467-acre land parcel at 4909 Lower Honoapiilani Road along the western coast of the island of Maui. The land parcel is identified by Tax Map Key (TMK): 2-4-3-03:015 comprised of all of R. P. 4697, L.C. AW. 4807:03 to NIKA 2, all of R. P. 4697, L. C. AW. 4807:04 to NIKA 2, and Portion of R. P. AW. 5524 to L. KONIA. The Tax Map for the condominium complex is depicted in Figure 2-1.

The land parcel is designated as R-3 Residential, according to the Maui County Zoning. It consists of a mix of five separate two and three-story wood framed structures encompassing 79 units of two and one-bedroom apartments, plus a manager's residence and offices and a detached laundry building. The complex was originally constructed in early 1970s and has undergone several phases of alterations and/or renovations since then. There are a total of 16 one-bedroom units and 63 two-bedroom units in five detached structures referred to as Building "A" to "F" in addition to a 4-bedroom unit used as the property manager's residence and office in Building "G" plus two offices and a laundry room in a separate detached building next to Building "G". The units are mostly individually owned and used as residences or for vacation rental.

All structures excluding the Resident Manager's and the offices have three floors. Buildings A and E have eleven two-bedroom units. The units have 1106 SF of living area and 308 SF of lanai. Buildings B and E have five one-bed room units and eleven two-bed-room units. One bed-room units are all identical and have 700 SF of living area and 84 SF of Lanai. The two-bedroom units have 1050 SF of living area and 392 SF of lanai. Building D and E each has eleven one-bedroom units with 700 SF of living area and 84 SF of lanai. Building G is a four-bedroom unit used as the complex's Manager's residence. An additional detached building houses four offices and a laundry room and is located adjacent to building G.

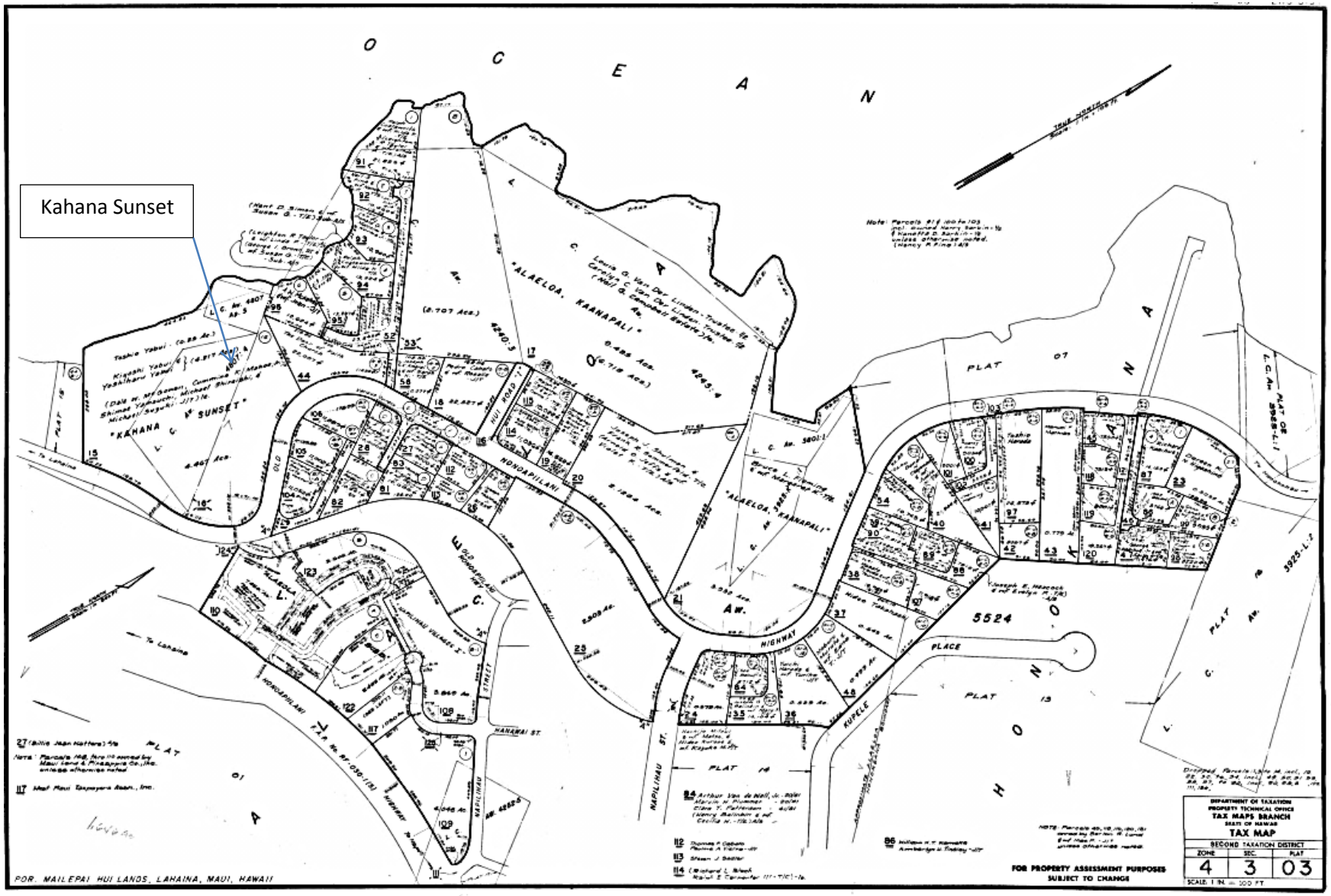

Figure 2-1 Property Tax Map

The grounds are well kept and landscaped with lawn, ornamental flowers and palm trees which include a pool, a shower and barbeque pavilion. A site plan showing various facilities of the development is depicted in Figure 2-2.

2.2 Land Use

The site of the development is designated as "R-3 Residential District" by Maui County. In West Maui Community Plan, the site is designated as "Single Family" and has a State Land Use "Urban" designation. The Kahana Sunset AOAO obtained a zoning variance in 1968 for multi-family apartment use.

2.3 Topographic and Geotechnical Features

The existing topography at the project site is defined by graded apartment pads and paved parking areas, developed over a gently sloping land which descends south westerly towards the beach along the Keonenui Bay. The meandering Lower Honoapiilani Road defines the northern and eastern boundary of the property and the elevations along this road bordering the property ranges from 49.9 above Mean Sea Level (MSL) at the northern section of the upper entrance to 47.23 at the southern entrance. The site has a southwesterly slope of about 9 percent.

According to the U.S. Natural Conservation Services (NRCS), the soils in the project area belong to Waiakoa-Keahua- Molokai Association which defines them as *moderately deep, deep, nearly level to moderately steep, well drained soils that have moderately fine textured subsoil*. The soils have a surface layer of dark reddish brown, friable silty clay loam. Substratum is soft, weathered igneous rock. Specifically the site is comprised of three types of soils, namely, beach sand (BS), Kahana Silty Clay (KbC), and rough broken and stony land (rRS).

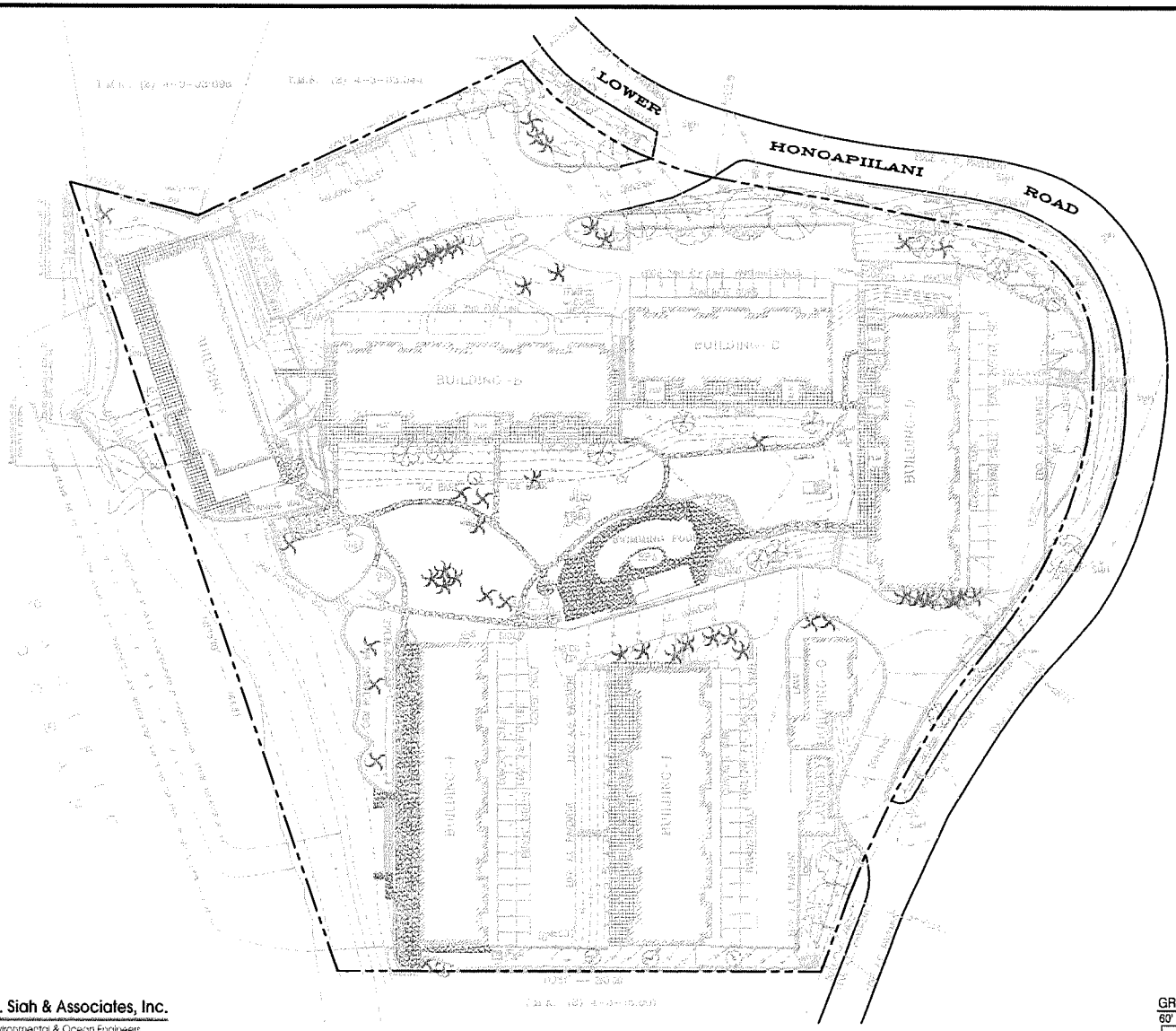

LEGEND:

1. WM = WATER METER
2. WV = WATER VALVE
3. ICV = IRRIGATION CONTROL VALVE
4. SMH = SEWER MANHOLE
5. SDMH = STORM DRAIN MANHOLE
6. LP = LIGHT POST
7. FH = FIRE HYDRANT
8. TFMR = TRANSFORMER
9. PP = POWER POLE
10. MH = MANHOLE
11. DRN =DRAIN
12. IB IRRIGATION BOX
13. UB = UTILITY BOX
14. GW = GUY WIRE

TREE

PALM

PLUMERIA

SIDEWALK

CRM WALL

CONCRETE PAVEMENT

COCONUT

Marc M. Siah & Associates, Inc.
Consulting Civil . Structural . Environmental & Ocean Engineers
810 S. Beretania Street, Suite 201, Honolulu, Hawaii 96813

FIG. 2-2 SITE PLAN
SCALE: 1"=60'

GRAPHIC SCALES:
60' 0 60' 120'
SCALE: 1" = 60'-0"

A series of nine geotechnical borings were collected by Weideg in 2006, prior to repair of walls fronting A and F buildings. The logs relating to borings no. 1 to no. 6, were taken at locations in front of Building F, both makai and mauka of the new wall, indicate presence of "tan to bluff, moist, loose, and very fine to medium, poorly graded, coralline, slightly silty fill" In contrast, borings no.7 to no. 9, taken makai side of building A, indicate "clayey silt, grey-brown, moist, medium stiff with scattered fine to medium, sub-angular, weathered basaltic gravel" to a depth of 5 feet below the ground. This material is underlain by grey- brown and highly fractured basalt to the bottom of the boring.

2.4 Flora

The open space and grounds encompass two entrance driveways, and six parking lots. The rest of the area is grassed and landscaped with ornamental plants and shrubs and palm trees. There is no endangered species of plants on the property.

2.5 Existing Drainage Infrastructure

The existing drainage infrastructure on the property consists of drain lines of various sizes, drain inlets, drywells, storm drain manholes, and cobble-lined drainage channels which are located at strategic locations throughout the development to intercept, collect and convey storm runoff by means of a 36-inch outfall and several other smaller drainage pipes into the Keonenui Bay.

Historically, the location of the property has dictated it to be the natural terminus of all upland surface runoff before entering the bay. This flow has included runoff generated on the road Right-of-Way as well as adjacent properties along the mauka side of the Lower Honoapiilani Road, including the Napili Villas development. The storm drain infrastructure in Napili Villas was originally constructed to include two retention/detention basins as the back bone of the system with the capacity to contain and hold storm runoff volumes generated on the entire development during 10-year design storms. During severe storms and emergencies, however, a

spillway system was also devised and constructed to allow occasional overflow from these two retention/detention basins to flow via a 24-inch storm drain/culvert traversing the Lower Honoapiilani Road, into a dry-well/intake structure located on Kahana Sunset property, on its way towards its terminus at the beach, adjacent to the barbeque pavilion in Kahana Sunset. In short, after completion of the Napili Villas development, the unobstructed and direct overland flow from upland areas entering the Kahana Sunset, was limited to only the surface flow generated on the lower Honoapiilani Road Right-of-Way. A drainage report prepared as part of the Maui County Department of Public Works project, "Lower Honoapiilani Road Improvements, Phase 4", estimates this overland flow within the road Right-of-Way, between Baseline Road Stations, BL Rd. Sta. 143+00 and 155+00, at 9.12 cfs, which enters into the existing Kahana Sunset drainage system at two discharge points. These point connections include existing storm drain inlets in the roadway right-of-way and a 24-inch drain pipe which directs the flow to an existing Kahana Sunset storm drain manhole located between Building C and D. The inlets are in a state of disrepair and are not adequately maintained to efficiently handle storm runoff from the road right-of-way. Stray and unmitigated roadway storm runoff sheet flows overland and enters Kahana Sunset, which at times, has caused localized erosion and property damage. According to the County of Maui Department of Public Works, the existing roadway storm drainage infrastructure, are to be upgraded in near future as part of the Lower Honoapiilani Road Improvements, Phase 4, Project.

In addition to accommodating storm flow pass through from Honoapiilani Road Right-of-Way, The Kahana Sunset Storm Drain System, also receives unknown quantities of emergency storm water overflows from the Napili Villas. Although the exact amount of emergency flow has not been quantified, however, the capacity of the 24-inch culvert, draining into the Kahana Sunset Drainage System, has been estimated at 44 cfs.

In other words, the Kahana Sunset Storm Drain infrastructure not only accommodates on-site generated storm flows, but it also receives off-site flows from county right-of-way estimated at

9.12 cfs as well as a maximum of 44 cfs emergency storm runoff overflow from Napili Villas development.

On-site storm water collection and conveyance system in Kahana Sunset, consists of various means of flows diversion, collection and conveyance, ranging from swales to open channels, drain pipes, inlets, manholes, and a 36-inch outfall. In general, storm runoff generated in open planted areas with bare soil mostly infiltrate into the ground. Over flows from these areas, join the overland sheet flow in the central open and grassed yard, the flows from roofs' down spouts, at times channelized or sheet flow on the paved roadways and parking, are all directed towards various inlets and intake structures constructed within the property, before they ultimately discharge into the bay via the 36-inch outfall. Surface flow patterns and various inlets and other drainage facilities and details at project site, are depicted in Figure 2-3 and Figure 2-4. In summary and as indicated the infrastructure includes, eight drain lines of various sizes ranging from 6-inch to 36-inch, four storm drain manholes, one intake/dry well, two 24-inch wide rectangular cobbled open channels, several swales collecting and diverting roof runoffs to various inlets, more than 12 drain inlets and a series of 4-inch drain pipes which mostly drain the lawn/lanai areas makai of Buildings A and F.

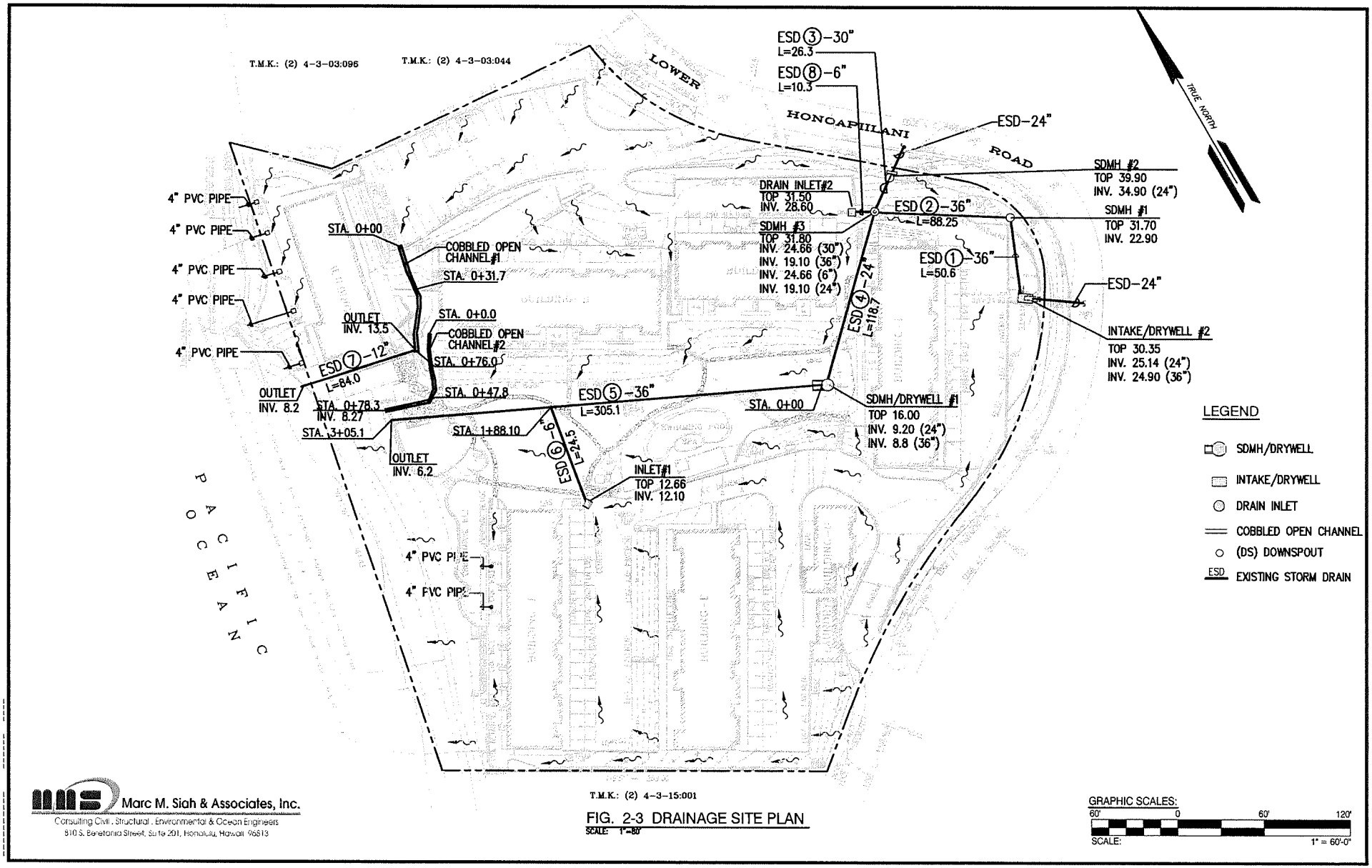

Marc M. Siah & Associates, Inc.
Consulting Civil . Structural . Environmental & Ocean Engineers
810 S. Beretania Street, Suite 201, Honolulu, Hawaii 96813

FIG. 2-3 DRAINAGE SITE PLAN
SCALE: 1"=80'

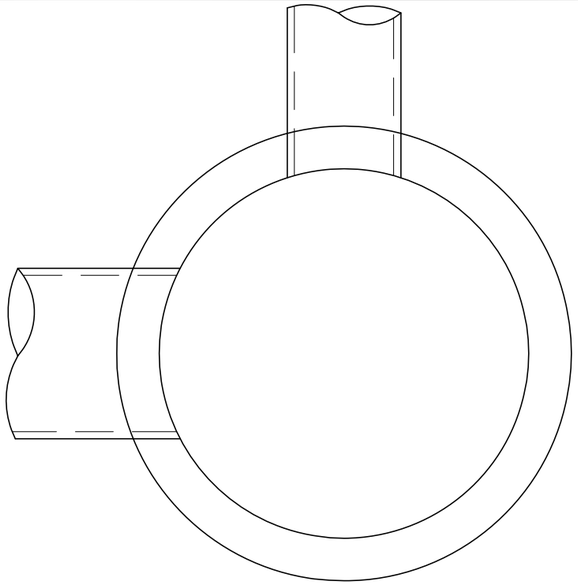

PLAN-SDMH/DRYWELL #1
SCALE: 3/8"=1"-0"

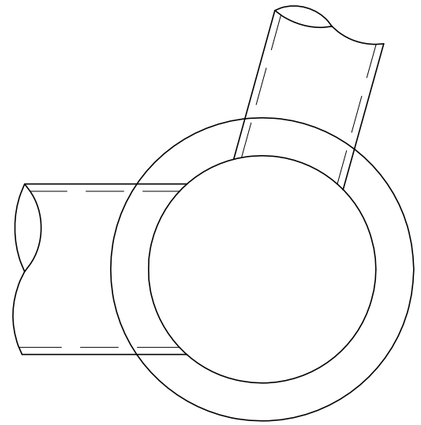

PLAN-SDMH/DRYWELL #2
SCALE: 3/8"=1"-0"

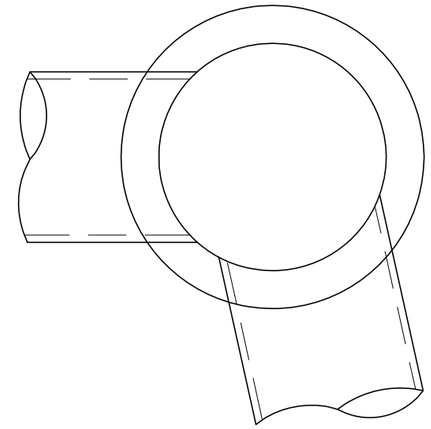

PLAN-SDMH #1
SCALE: 3/8"=1"-0"

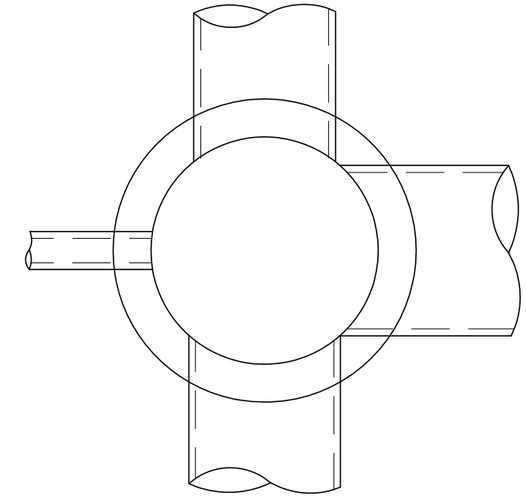

PLAN-SDMH #3
SCALE: 3/8"=1"-0"

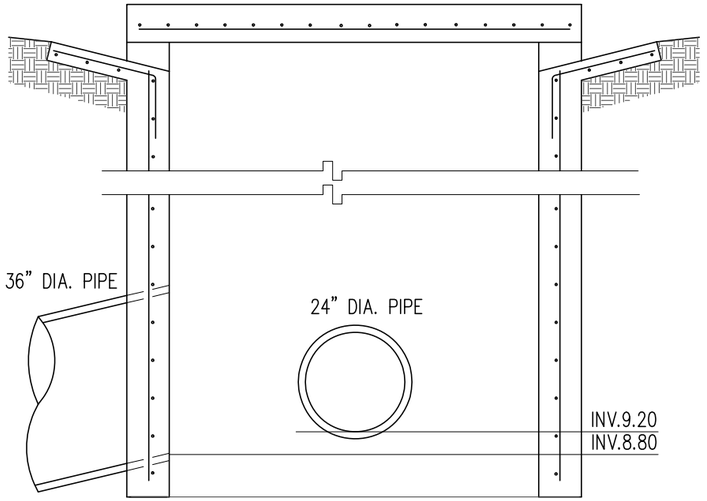

SECTION-SDMH/DRYWELL #1
SCALE: 3/8"=1"-0"

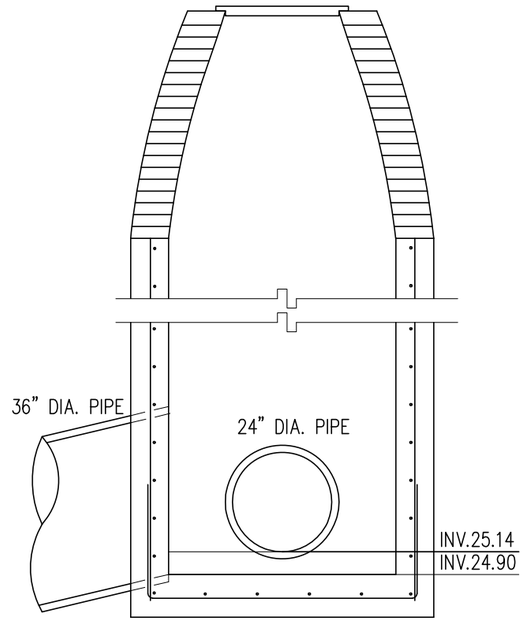

SECTION-INTAKE/DRYWELL #2
SCALE: 3/8"=1"-0"

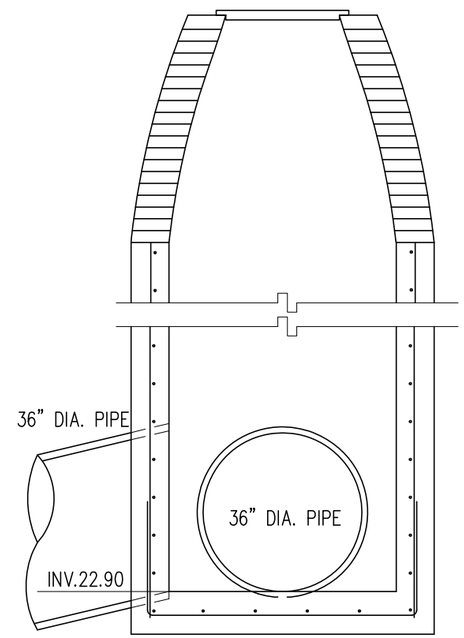

SECTION-SDMH #1
SCALE: 3/8"=1"-0"

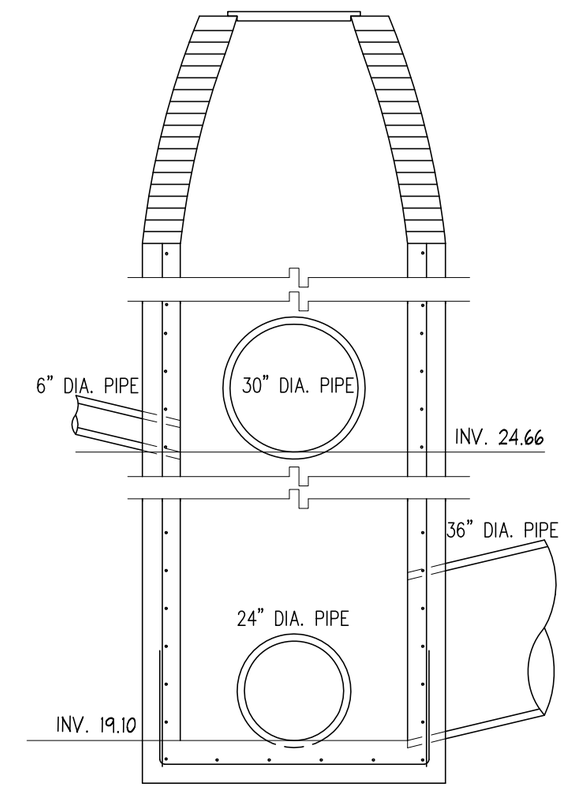

SECTION-SDMH #3
SCALE: 3/8"=1"-0"

Marc M. Siah & Associates, Inc.
Consulting Civil . Structural . Environmental & Ocean Engineers
810 S. Beretania Street, Suite 201, Honolulu, Hawaii 96813

FIG. 2-4 STORM DRAIN MANHOLE DETAILS
SCALE: AS NOTED

SECTION 3.0

DRAINAGE ANALYSIS

Marc M. Siah & Associates, Inc.

Consulting Civil • Structural • Environmental & Ocean Engineers
820 South Beretania Street, Suite 201, Honolulu, Hawaii 96813

SECTION 3.0
DRAINAGE ANALYSIS

This section presents the methodology used for hydrological analysis of the site and presents the results of this analysis for the existing conditions at the site in contrast to the future conditions when proposed improvements at beach front are constructed. The modification proposed, mostly deal with repair and realignment of existing seawalls, and reconfiguration of the beach.

3.1 Background

As mentioned in the previous sections, in order to address the failure of the retaining wall fronting the BBQ stand, the Kahana Sunset AOAO, has commissioned preparation of a project Master Plan which proposes repair and modifications to existing protective seawalls, and removal of non-complying structures on the property. The AOAO is also, in the process of applying for a shoreline setback variance which is necessary to allow the proposed construction work. This drainage report analyzes and contrasts the existing drainage conditions with the future conditions when the proposed modifications and renovation are implemented in accordance with the project Master Plan.

3.2 Flood Hazard Designation

Flood Insurance Rate Maps (FIRM), are used to evaluate the potential for flooding at the Kahana Sunset Condominium Complex. Based on FIRM Map Index dated September 25, 2009, the project is located on the panel 1500030264E. Accordingly, the site encompasses three flood zone designations, namely, Zone X, Zone AE and Zone VE, as shown in Figure 3-1. The majority of the property lies in Zone X, which refers to an area outside of the 500-year flood plain. The beach front and a section of the ocean front yard, is located in AE Zone, which refers to area within 100-year flood plain with based flood determined at 17 feet. Zone VE which extends seaward of the beach, fronting the property, defines the limits of 100-year coastal flood plain with additional storm waves hazards and dangerous velocities.

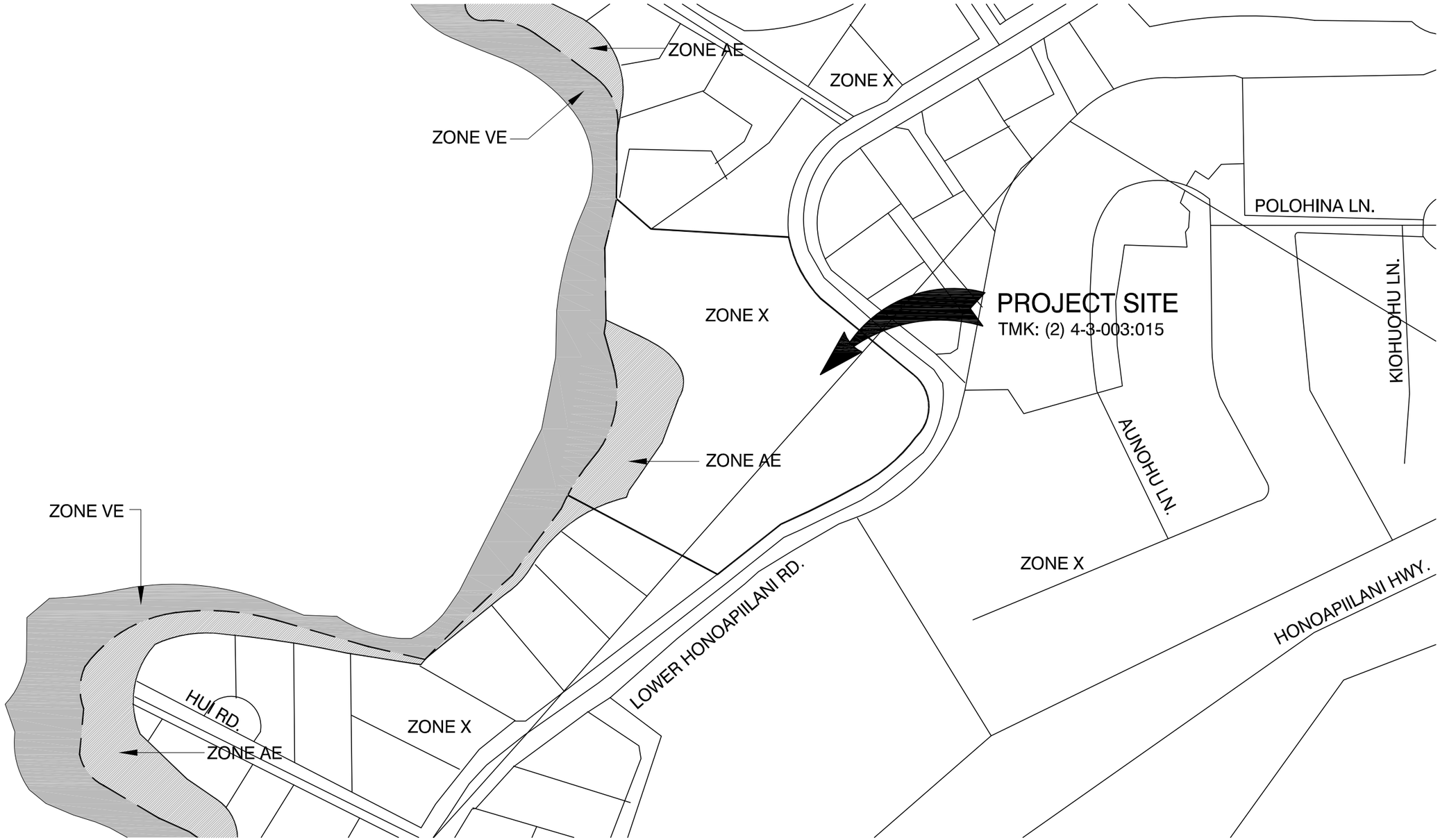

Marc M. Siah & Associates, Inc.
Consulting Civil . Structural . Environmental & Ocean Engineers
810 S. Beretania Street, Suite 201, Honolulu, Hawaii 96813

FIG. 3-1 FLOOD INSURANCE RATE MAP
SCALE: NONE

FLOOD INSURANCE RATE MAP
MAP NO. 1500030264E

3.3 Hydrologic Analysis

Two separate hydrologic analyses are performed in this report. The first, examines the existing drainage conditions at the site, and the second, examines the conditions at the site following the construction of the proposed modifications to the seawalls and reconfiguration of the ocean front of the property in accordance with the proposed project Master Plan. The two analyses are performed to discern the impact of project construction work on existing drainage conditions at the site and to determine whether drainage improvements are necessary. The analysis entails dividing the property into small sub-areas for which runoff quantities are calculated using a 10-year design storm and rational method in accordance with the Rules for the Design of Strom Drainage Facilities for the County of Maui.

3.3.1 Hydrologic Criteria

The hydrologic analyses of the existing and completed construction conditions are based upon several hydrologic criteria. The hydrologic criteria for the project site are developed through the use of the guidelines and design charts presented in the Title MC-15, department of Public Works, County of Maui, Chapter 4, Rules for the Design of Storm Drainage Facilities in the County of Maui (RDSDF). The hydrologic criteria are as follows:

1. A recurrence interval (Tm) of 10 years is used for each hydrologic analysis since the drainage area is less than 100 acres, without sumps or tailwater effects and do not involve the design of roadway culverts and bridges.
2. Runoff quantities are calculated using the Rational Method since the drainage area is less than 100 acres.
3. The Rational Method relates the peak discharge to the drainage area, the rainfall intensity and the runoff coefficient. The Rational Method is expressed as the equation:

$$Q = C * I * A,$$

Where Q = flow rate in cubic feet per second (ft3/s);

C = runoff coefficient;

I = rainfall intensity in inches per hour (in/hr) for a duration equal to the time of concentration (Tc); and

A = drainage area in acres.

4. For distinctive composite (nonhomogeneous) drainage areas, a weighted value of C is used. The weighted C value is determined through the equation:

$$C_w = \frac{\sum_{j=1}^{n} C_j \cdot A_j}{\sum_{j=1}^{n} A_j},$$

Where C_W = weighted runoff coefficient;

A_j = Sub-area for specific land cover j;

C_j = runoff coefficient for sub-area j; and

n = number of distinct land covers within Parcel.

5. The 1-hour rainfall value (RV 1-hour) is determined from Plate 4, 10–yr. 1-hr rainfall (in.), in the RDSDF. The RV 1-hour is calculated through linear interpolation of the isohedral lines on Plate 4.

The overland flow time, or time of concentration (Tc) is determined through the use of Plate 1, a nomograph entitled Overland Flow Chart, from the RDSDF. This chart is used for land that is generally paved, bare soil or grassed.

The Tc value, obtained from Plate 1, along with the 1-hour rainfall value from Plate 4, is used in Plate 2, to obtain the design rainfall intensity in inches per hour.

3.3.2 Hydrological Computations - Existing Conditions

The existing conditions at the development, is the basis for calculating the peak storm runoff on the property. The site plan presented in previous Section in Figure 2-2, represents the present conditions at the project site. The entire project area is subdivided into 18 subareas as delineated in Figure 3-2. Storm runoff quantities are then calculated for each sub area and allocated to specific drainage handling infrastructure such as drain intake, storm drain pipe, overland sheet flow, etc. The total runoff volume on the property is then calculated by summing the flows from each subarea. A brief description of each sub area is presented in the following paragraphs.

Subarea No. 1, encompasses part of the lower entrance drive way which is entirely paved with slopes ranging between 7 to 10 percent. Storm runoff in this subarea sheet flows into subarea no. 14, and collected by drain inlet # 1.

Subarea No. 2, encompasses building D and the paved parking lot east of the building. There is a bare strip of soil with shrubs and flower plants on the north end of Building D. Storm runoff in this subarea consists of roof runoff collect by down spouts on both ends of the building and sheet flow on paved surface of the parking area, towards Intake/drywell No. 1.

Subarea No. 3, refers to a strip of bare soil with plans and palm trees sandwiched between the Lower Honoapiilani Road Right-of-Way and the parking area for Building D. Surface runoff that does not infiltrate the soil in this subarea, either directly sheet flows into intake/drywell no.1, or enters Subarea No. 2 before discharging into intake/dry well no.1.

Subarea No. 4, is also a strip of planted land directly north of Buildings D and C, and enclosed between the Lower Honoapiilani Road and the parking area for Building C. Surface runoff from this subarea sheet flows into subareas No. 2 and No. 5.

SUBAREA TABULATION		
SUBAREA 1	5,237.55 SF.	0.12 AC.
SUBAREA 2	18,273.83 SF.	0.42 AC
SUBAREA 3	4,035.94 SF.	0.09 AC.
SUBAREA 4	5,842.07 SF.	0.134 AC.
SUBAREA 5	5,562.05 SF.	0.127 AC.
SUBAREA 6	2,792 SF.	0.064 AC.
SUBAREA 7	12,478.64 SF.	0.28 AC.
SUBAREA 8	6,151.68 SF.	0.14 AC.
SUBAREA 9	3,232.14 SF.	0.074 AC
SUBAREA 10	13,644.35 SF.	0.31 AC
SUBAREA 11	49,959.78 SF.	1.15 AC.
SUBAREA 12	12,897.25 SF.	0.3 AC.
SUBAREA 13	15,148 SF.	0.35 AC.
SUBAREA 14	29,454 SF.	0.68 AC
SUBAREA 15	3,002.88 SF.	0.068 AC.
SUBAREA 16	1,917.45 SF.	0.04 AC.
SUBAREA 17	4,617.27	0.10 AC.
SUBAREA 18	466.33 SF.	0.01 AC.
TOTAL	194,713.2 SF.	4.47 AC.

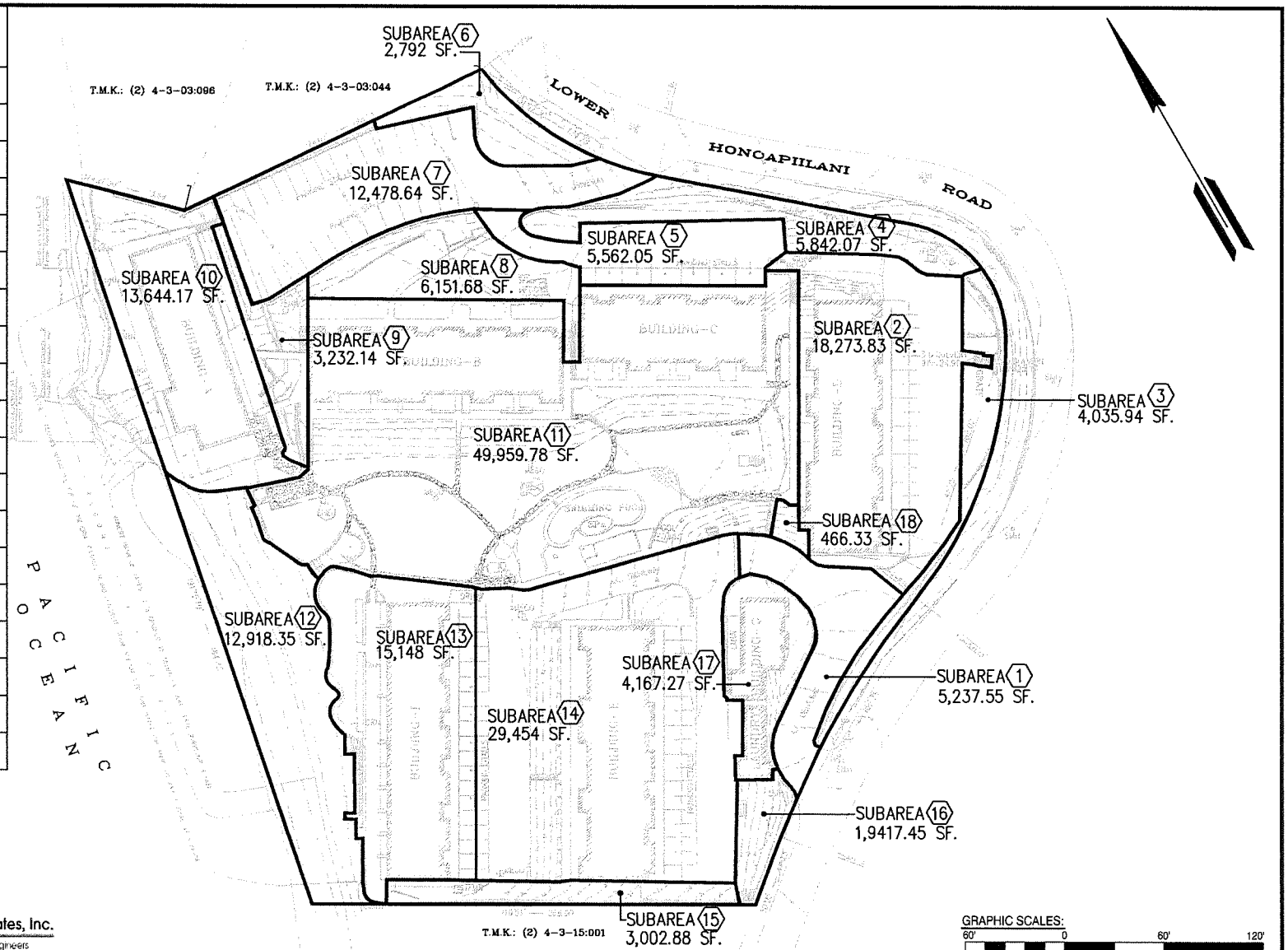

Marc M. Siah & Associates, Inc.
Consulting Civil, Structural, Environmental & Ocean Engineers
810 S. Beretania Street, Suite 201, Honolulu, Hawaii 96813

FIG. 3-2 SUBAREA DELINIATION FOR STORM RUN OFF CALCULATIONS - EXISTING CONDITIONS
SCALE: 1"=60'

GRAPHIC SCALES:
60' 0 60' 120'
SCALE: 1" = 60'-0"

Subarea No. 5, consists mainly of the paved parking lot of Building C. Storm runoff in this subarea sheet flows into the existing storm drain manhole, identified as SDMH #3, located in the paved area north of Buildings D and C.

Subarea No. 6, refers to a triangular patch of planted area enclosed by the perimeter fence and the entrance driveway into parking lots of Buildings A, B and C. the patch has a steep slope of about 15 percent. Excess runoff generated in this subarea, and not absorbed by the bare soil, overflows into Subarea No. 7.

Subarea No. 7, is the entire paved driveway and parking lot north of Building B. All storm runoff in this subarea sheet flows south westerly to the drain pipe which conveys the surface flow into the 24-inch wide cobbled drainage channel #1, between Buildings A and B. The channel delivers the flow to the 12-inch storm drain line # 7, which traverses under Building A day lighting on the makai face of the retaining wall fronting Building A.

Subarea No. 8, refers to the landscaped area containing grass and various ornamental plants which is enclosed by Subarea No. 5, Building B and Subarea No. 7. Runoff in this area if not totally absorbed by the soil, sheet flows easterly entering Subarea No. 11, between Buildings B and C.

Subarea No. 9, is the steeply sloped and heavily vegetated space between Buildings A and B. Runoff from this subarea is collected by an existing cobbled open channel which has its outlet adjacent to the 36-inch outfall pipe makai of the barbeque/shower pavilion.

Subarea No. 10, encompasses building A and the open lawn areas to the north and west of it. Roof runoff via down spouts and the sheet flow on open grassed areas, flow into four drain inlets located on the makai side of Building A. All these inlets are piped into the bay by 4-inch PVC drain lines.

Subarea No. 11, refers to the open central section of the development with an area of about 1.15 acres. Its boundaries are defined by building D on the east, buildings C and B on the north, beach area on the west and the entrance roadway on the south. With the exception of buildings B and C, a pool, a pump house, restroom facilities and the shower and the barbeques pavilion, the subarea is open and landscaped with lawn and ornamental flowers, trees, shrubs, hedges and meandering walkways. The open space is gently sloped directing storm runoff, including that from the roofs of Building B and C, to sheet flow towards the central intake structure/dry well or towards the beach.

Subarea No 12, consists of the entire beach area makai of existing seawalls. There is no significant runoff generated in this subarea.

Subarea N. 13, encompasses Building F and the open grassed and tiled areas to the north and makai of it. Roof runoff and surface sheet flow from this subarea enter an existing drain inlet no. 1, in northwest corner of the parking lot adjacent to Building F. An existing 6-inch drain line conveys the flow form this inlet into the main 36-inch line outfall traversing Subarea 11 on its way to the outlet at the beach.

Subarea No. 14, encompasses the paved parking area for Building F on the east, paved main drive way to the north, and Building E and its parking lot. The runoff from the paved surfaces combined with the flow from the building roofs, sheet flow over paved surfaces towards the drain inlet no. 1, at the north west corner of the subarea. There is a small patch of bare soil with plants north of Building E included in this subarea.

Subarea No. 15, refers to sloping strip of land running westerly along the southern perimeter fence. The strip includes bare soil with plants and a few ornamental shrubs and trees. Runoff in this subarea is mostly absorbed by bare soil or sheet flows into subarea 14.

Subarea No. 16, refers to a small patch of sloping land with bare soil and a few plants, enclosed by perimeter fence along L. Honoapiilani Road on the east, the Laundry building, and parking lot of Building E. Storm runoff in this area is mostly absorbed by the bare soil and the overflow enter subarea 15.

Subarea 17, encompasses the manager' residence and its open yard and the laundry room and offices sandwiched between the Lower Honoapiilani Road, entrance driveway and the parking lot of Building F. Flows generated on the roofs of the structures combined with surface flow in this area, sheet flows into subarea No. 15.

And Finally Subarea No. 18, is a small patch of sloping land enclosed by entrance driveway, Building D and subarea 11. Surface runoff in this area, if not totally absorbed by bare soil, will over flow into subarea No. 11.

Peak storm runoff on the property representing the existing conditions is computed based on summation of peak flows calculated for each of the 18 subareas comprising the entire development. The runoff coefficient, C-factor, and time of concentration, $T_{c,}$ for each subarea are estimated based on composition and nature of surface cover, roof structure, paved, gravel or grass, surface area and slope. For areas comprised of different ground covers a weighted C-factor representing contribution of different surface covers, is used. The one-hour 10-year storm rainfall, in inches, is used to determine the rainfall intensity, in inches per hour, in each subarea and to calculate peak storm runoff generated in each subarea for the existing conditions. Detail storm runoff calculations are presented in Appendix A, and a summary of the results is presented in Table 3-1. Accordingly, total storm runoff generated on-site is calculated at 11.53 cfs. In addition to this flow, extraneous off-site flows entering the Kahana Sunset' storm drain infrastructure, include 9.12 cfs from County's L. Honoapiilani Road Right-of-Way, and unspecified quantity from the Napili Villas and makai properties. In an agreement between the County and Kahana Sunset AOAO, this quantity has been agreed to a maximum of

Table 3-1 Summary of Drainage Calculation Results for the Existing Conditions

Subarea	C-factor[1]	Area (Acres)	Runoff Generated by 10-year Storm (ft^3/sec)
$Area_1$	0.9	0.12	0.39
$Area_2$	0.93	0.419	1.28
$Area_3$	0.4	0.093	0.14
$Area_4$	0.4	0.134	0.20
$Area_5$	0.9	0.128	0.39
Area6	0.4	0.064	0.08
$Area_7$	0.9	0.286	0.94
$Area_8$	0.35	0.141	0.19
$Area_9$	0.4	0.074	0.12
$Area_{10}$	0.67	0.313	0.79
$Area_{11}$	0.57	1.147	3.39
$Area_{12}$	0.05	0.296	0.05
$Area_{13}$	0.86	0.348	0.78
$Area_{14}$	0.92	0.676	2.36
$Area_{15}$	0.4	0.069	0.11
$Area_{16}$	0.4	0.044	0.06
$Area_{17}$	0.69	0.106	0.25
$Area_{18}$	0.4	0.011	0.01
	TOTAL ON SITE RUNOFF	**4.47**	**11.53**

[1] C-factor for subareas with multiple cover surfaces, is the weighted C-factor for that area

44 cfs as dictated by the capacity of the existing 24-inch culvert. In other words, the total off-site storm runoff entering into the Kahana Sunset drainage system can reach as high as 53.12 cfs. The total combined potential runoff from Kahana sunset, including off-site flow, discharging into the Keonenui Bay via the existing 36-inch outfall is 64.65 cfs.

3.3.3 Hydrological Computations – Future (Finished) Conditions

Similar to the existing conditions, storm runoff flows are computed for the future (finished) conditions of the property based on the proposed Master Plan as depicted in Figure 3-3. The new subarea delineation based on the Master Plan is presented in Figure 3-4.

According to this Master Plan, two new flanking walls will be constructed to better delineate and protect the living quarters and the recreational areas from the beach area. It also includes realignment and improvement of the transition area from the on-site open and landscaped grounds and swimming pool to the beach. According to the proposed improvements, the beach area will be extended further into the on-site open space and will be demarcated by the two flanking walls and a semi-circular steps delineating the sandy beach from the landscaped grounds. The new plans also call for demolition of the remainder of the meandering wall fronting Building F, which was severely damaged and eroded during the last storm and was replaced by a new wall further landward of the old wall.

In this fashion the extent of the future beach area represented as Subarea No. 12, will be expanded while that of subarea No. 11 and Subarea No. 13 will reduce. In other words, according to the development plan, in the future, the sandy beach area due to its nature of highly permeable ground cover, albeit a little larger in extent than at present, contributes little to no amount of runoff, while the runoff from Subarea No. 11 and Subarea No. 13 will decrease, from its present conditions, due to reduction in their aerial extents. The rest of the subareas constituting the totality of the development will remain the same. This means that total storm

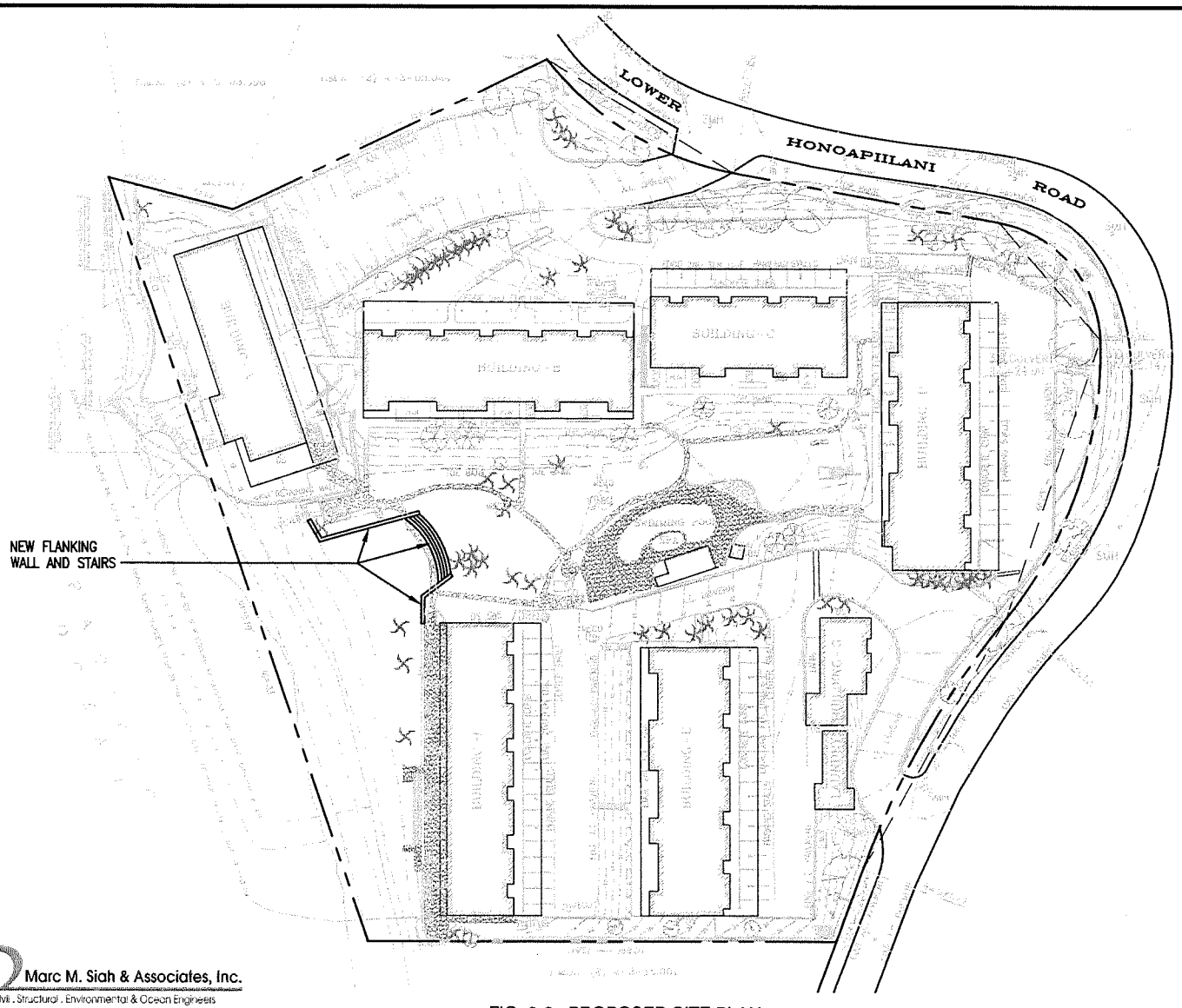

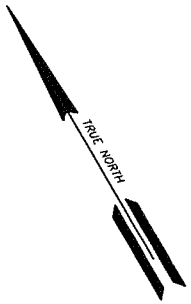

LEGEND:

1. WM = WATER METER
2. WV = WATER VALVE
3. ICV = IRRIGATION CONTROL VALVE
4. SMH = SEWER MANHOLE
5. SDMH = STORM DRAIN MANHOLE
6. LP = LIGHT POST
7. FH = FIRE HYDRANT
8. TFMR = TRANSFORMER
9. PP = POWER POLE
10. MH = MANHOLE
11. DRN =DRAIN
12. IB IRRIGATION BOX
13. UB = UTILITY BOX
14. GW = GUY WIRE

TREE

PALM

PLUMERIA

SIDEWALK

CRM WALL

CONCRETE PAVEMENT

COCONUT

Marc M. Siah & Associates, Inc.
Consulting Civil, Structural, Environmental & Ocean Engineers
510 S. Beretania Street, Suite 201, Honolulu, Hawaii 96813

FIG. 3-3 PROPOSED SITE PLAN
SCALE: 1"=60'

GRAPHIC SCALES:
60' 0 60' 120'
SCALE: 1" = 60'-0"

SUBAREA TABULATION

SUBAREA 1	5,237.55 SF.	0.12 AC.
SUBAREA 2	18,273.83 SF.	0.42 AC
SUBAREA 3	4,035.94 SF.	0.09 AC.
SUBAREA 4	5,842.07 SF.	0.134 AC.
SUBAREA 5	5,562.05 SF.	0.127 AC.
SUBAREA 6	2,792 SF.	0.064 AC.
SUBAREA 7	12,478.64 SF.	0.28 AC.
SUBAREA 8	6,151.68 SF.	0.14 AC.
SUBAREA 9	3,232.14 SF.	0.074 AC
SUBAREA 10	13,644.35 SF.	0.31 AC
SUBAREA 11	47,438.49 SF.	1.1 AC.
SUBAREA 12	17,952.64 SF.	0.41 AC.
SUBAREA 13	12,635 SF.	0.3 AC.
SUBAREA 14	29,454 SF.	0.68 AC
SUBAREA 15	3,002.88 SF.	0.068 AC.
SUBAREA 16	1,917.45 SF.	0.04 AC.
SUBAREA 17	4,617.27	0.10 AC.
SUBAREA 18	466.33 SF.	0.01 AC.
TOTAL	194,713.2 SF.	4.47 AC.

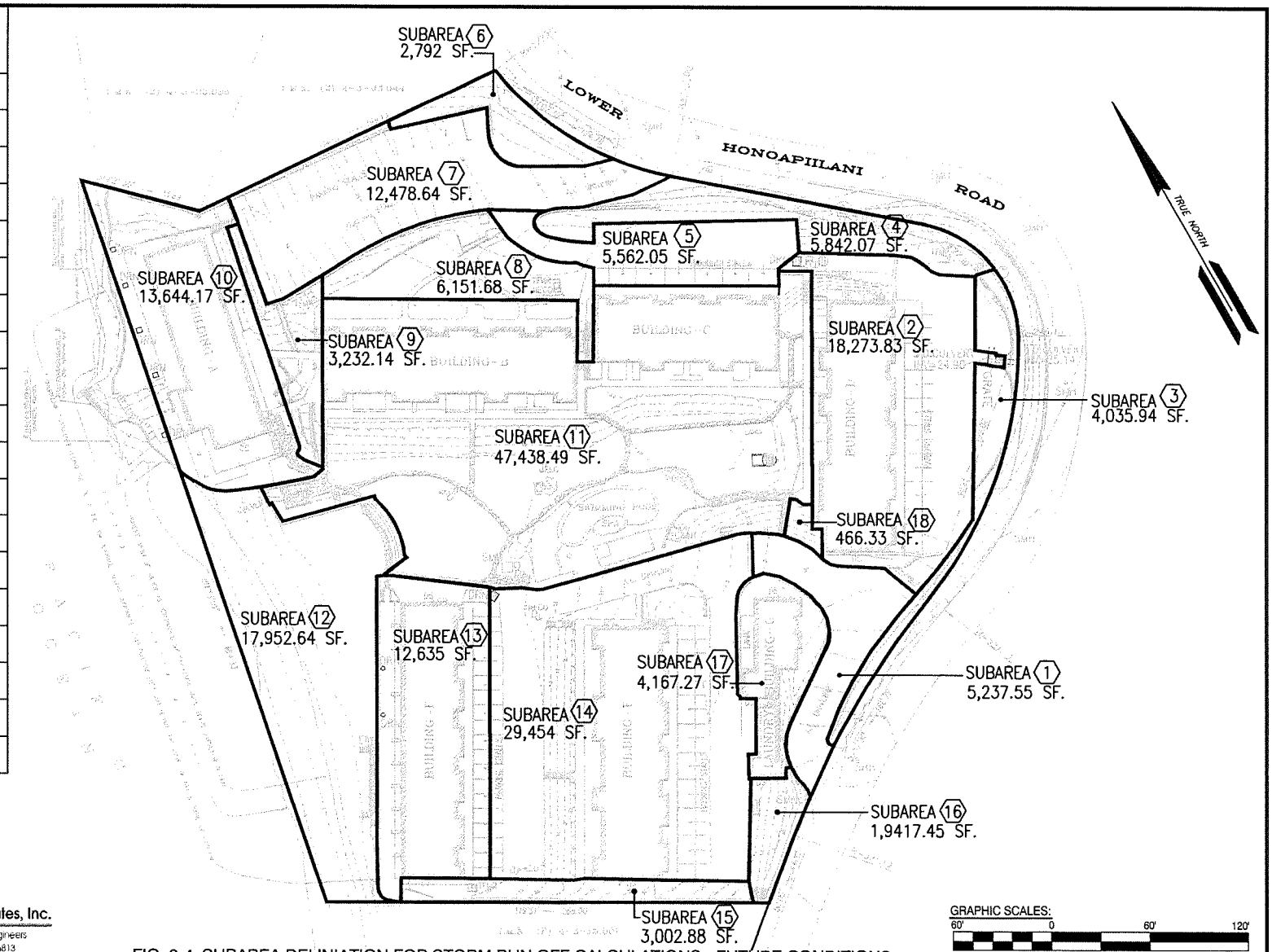

GRAPHIC SCALES:
60' 0 60' 120'
SCALE: 1" = 60'-0"

Marc M. Siah & Associates, Inc.
Consulting Civil . Structural . Environmental & Ocean Engineers
810 S. Beretania Street, Suite 201, Honolulu, Hawaii 96813

FIG. 3-4 SUBAREA DELINIATION FOR STORM RUN OFF CALCULATIONS - FUTURE CONDITIONS
SCALE: 1"=60'

runoff generated on the property will reduce from 11.53 cfs to 11.35 cfs, which amounts to about one and half percent reduction, as validated by calculations summarized in Table 3-2.

Table 3-2 Summary of Drainage Calculation Results for the Future (Finished) Condition

Subarea	C-factor[1]	Area (Acres)	Runoff Generated by 10-year Storm (ft^3/sec)
$Area_1$	0.9	0.12	0.39
$Area_2$	0.93	0.419	1.28
$Area_3$	0.4	0.093	0.14
$Area_4$	0.4	0.134	0.20
$Area_5$	0.9	0.128	0.39
Area6	0.4	0.064	0.08
$Area_7$	0.9	0.286	0.94
$Area_8$	0.35	0.141	0.19
$Area_9$	0.4	0.074	0.12
$Area_{10}$	0.67	0.313	0.79
$Area_{11}$	0.58	1.090	3.30
$Area_{12}$	0.05	0.410	0.07
$Area_{13}$	0.89	0.290	0.67
$Area_{14}$	0.92	0.676	2.36
$Area_{15}$	0.4	0.069	0.11
$Area_{16}$	0.4	0.044	0.06
$Area_{17}$	0.69	0.106	0.25
$Area_{18}$	0.4	0.011	0.01
	TOTAL ON SITE RUNOFF	**4.47**	**11.35**

[1] C-factor for subareas with multiple cover surfaces, is the weighted C-factor for that area.

SECTION 4.0

DRAINAGE INFRASTRUCTURE ADEQUACY EVALUATION

Marc M. Siah & Associates, Inc.

Consulting Civil • Structural • Environmental & Ocean Engineers
820 South Beretania Street, Suite 201, Honolulu, Hawaii 96813

SECTION 4.0

DRAINAGE INFRASTRUCTURE ADEQUACY EVALUATION

In this section adequacy of the existing drainage infrastructure at Kahana Sunset Condominium Complex is evaluated.

4.1 Existing Facilities and Hydraulic Calculations

The overall drainage concept in the development of Kahana Sunset is based on maximizing absorption of runoff on site by means of providing permeable surfaces such as lawn, and planting patches with bare soil, and drywells. The balance of surface runoff, not directly absorbed by ground surface, is then directed and conveyed by surface sheet flow, swales, open channels, drain inlets and drainage pipes, intro the Keonenui Bay. As mentioned in the previous section, storm runoff from off-site mauka properties as well as some flow generated on Lower Honoapiilani Road Right-of-Way, enter into the Kahana Sunset drainage infrastructure prior to disposal via a 36-inch outfall into the Bay. The contribution of Kahana Sunset storm flow to the total runoff discharge into the bay is 11.53 cfs. In contrast, off-site flow traversing the development, can reach as high as 53.12 cfs. In other words, storm runoff discharge from Kahana Sunset could be as low as 17.8% of total discharge into the bay.

A series of computer simulations are performed to determine depths of flow in various existing on-site drain pipes and cobbled channels and the velocities which could be expected in each. Details of these calculations are presented in Appendix B. A summary of hydraulic parameters for each storm drain pipe and channel are presented in Table 4-1.

Accordingly, all drain pipes with the exception of Drain line # 6, in Kahana Sunset Drainage system, are adequate to conveys potential runoff flows from their tributary areas. However, storm drain line No. 6, which conveys storm runoff collected by the inlet # 1, located at the north east corner of Building F, is inadequate. The calculations further confirms the observation by the residents of Kahana Sunset Condominium, that during severe storm events, the inlet # 1,

over flows and floods the area. Based on these calculations presented in Appendix B, replacing, the existing 6-inch line with an 8-inch drain line will alleviate the flooding in the area.

Table 4-1 Hydraulic Parameters for Strom Drain Pipes and Channels

Component of Drainage System	Length (Feet)	Diameter/Width (Inches)	Slope (ft/ft)	Flow rate (cfs)	Depth (Inches)
Storm Drain Line # 1	50.60	36	0.0395	45.42	14.64
Storm Drain Line # 2	88.25	36	0.043	45.42	14.16
Storm Drain Line # 3	26.30	30	0.389	9.12	3.84
Storm Drain Line # 4	118.7	24	0.083	55.13	16.92
Storm Drain Line # 5:					
Sta. 0+00 to Sta. 1+88.1	188.10	36	0.008	55.13	27.36
Sta. 1+88.1 to Sta. 3+05.1	117.00	36	0.008	59.08	29.16
Storm Drain Line # 6	24.50	6	0.213	3.95	7.00[1]
Storm Drain Line # 6	24.50	8	0.213	3.95	5.00
Storm Drain Line # 6	24.50	10	0.213	3.95	4.30
Storm Drain Line # 7	84.00	12	0.063	1.02	2.70
Strom Drain Line # 8	10.3	6	0.388	0.59	1.70
Cobbled Open Channel # 1:					
Sta. 0+00 to Sta. 0+31.7	31.7	24	0.346	1.02	0.24
Sta. 0+31.7 to Sta. 0+76	44.3	24	0.19	1.02	0.36
Cobbled Open Channel # 2:					
Sta. 0+00 to Sta. 0+47.8	47.80	24	0.123	0.12	0.12
Sta. 0+47.8 to Outlet	30.50	24	0.118	3.59	0.72

[1] indicates that 6-inch pipe is inadequate.

The 24-inch storm drain line, SDL #4, which connects SDMH # 3 located in the paved area between Buildings C and D to the main SDMH/ Dry Well # 1, in the central open space, although has the capacity to convey the potential runoff form it's contributory areas, it creates a bottle neck in the system. During major storm events, when contribution from Napili Villas development and runoff from roadway right-of-way are the highest, this storm drain flows 70.56 percent full. The velocities in this line would reach as high as 23.26 fps. The Hydraulic Grade Line, HGL, calculations show that the 24 inch line causes water levels in the upstream manhole, SDMH # 2, to rise to 26.68 feet level, merely less than five feet below the ground surface. The impact of high HGL reaches even to Intake/Dry Well # 2. In other words, during a very severe storm when, off-site flows reaching Kahana Sunset may become even larger than the anticipated 53.12 cfs, both SDMH # 2, and the Intake/Dry Well # 2, may overflow causing material damage to the development. Replacing this segment of drain line with a larger 30-inch or 36-inch line, would reduce flow velocities and alleviate hydraulic inadequacy of the system during sever events. It would further ensure that system will have excess capacity for conveyance of unanticipated and unusual off-site runoff volumes. The hydraulic calculations also indicate that the two cobble-lined open channels are more than adequate for conveyance of storm waters from their respective tributary areas.

4.2 Conclusions and Recommendations

Review of the findings of drainage analyses presented in this report, leads to the conclusion that, overall the drainage infrastructure in Kahana Sunset, albeit old, is adequate to receive, collect, convey and dispose of all on-site storm runoff as well as off-site discharges into the system with the exception of the storm drain line no. 6. By replacing this line with a larger pipe, i.e., an 8-inch storm drain, the system will adequately handle the drainage needs of the development. However, as the calculations indicate, the 24-inch storm drain no. 4 creates a bottle neck in the system and during unusually severe storm events, may cause flooding of the upstream manhole no. 2, and even the intake/dry well # 2.

DRAINAGE INFRASTRUCTURE ADEQUACY EVALUATION

Since the existing storm drain inlets in the Lower Honoapiilani Road right-of-way are not well maintained and in poor conditions, not all runoff generated on the roadway is collected and conveyed into the system. During severe storm events some of the roadway runoff will sheet flow along the length of the property bordering the roadway, entering into the development and causing erosion and potentially property damage. New planned drainage improvements by the Maui County will alleviate this shortcoming and eliminate potential flooding of the property. However, in the short term, and before these proposed improvements are installed, it is prudent to devise a mechanism for blockage and interception of overland flow from roadway right-of-way. Barricading the length of property line along the roadway with sand bags or installing a new intercepting ditch along the roadway shoulder parallel to the property line, are two temporary schemes for protecting the development from localized erosion due to unimpeded stray overland flow of roadway storm runoff into the property. Additionally, the alleged cracks in the section of the existing 24-inch culvert/drain pipe crossing under the Lower Honoapiilani Road, and the conveying storm run-off overflows from Napili Villas' detention/retention basins, into the Kahana Sunset system, needs to be verified. Upon verifications, the section shall either be repaired or replaced. Other improvements to on-site drainage infrastructure shall include:

a. Design and construction of a new terminus for the 36-inch storm drain/outfall, which daylights at the beach, makai of the existing shower/barbeque pavilion;
b. Installation of a new drain pipe and inlet to replace the inadequate storm drain no. 6, and drain inlet no. 1, which receive overland flows from paved drive way, and the parking areas of Buildings E and F;
c. Install a new drain inlet at the south-western corner of parking lot for Building A and B. The new inlet shall replace the existing pipe which conveys runoff from the paved parking area into the open channel no. 1., and is often blocked by leaves and extraneous materials, causing localized ponding;

d. Construct a new inlet at the terminus of Channel no. 1, to improve conveyance of channelized flow into the existing drain line no. 7, terminates along the face of the retaining wall fronting Building A;

e. Construct an intercepting channel with gratings, to be installed along the width of the lower driveway, at location(s) to be determined, in order to reduce potential hazards of slippery driveway. A new pipe shall be installed to connect the end of the intercepting channel to the new inlet no. 1;

f. Inspect and clean all existing on-site storm manholes, to ensure they are free of blockages and debris.

g. Retrofit and install filters in all on-site drain inlets, to capture sediments, debris and other pollutants before they enter the system and ultimately discharge into the bay.

APPENDICES

Marc M. Siah & Associates, Inc.

Consulting Civil • Structural • Environmental & Ocean Engineers
820 South Beretania Street, Suite 201, Honolulu, Hawaii 96813

APPENDIX A

Drainage Calculations

Marc M. Siah & Associates, Inc.

Consulting Civil • Structural • Environmental & Ocean Engineers
820 South Beretania Street, Suite 201, Honolulu, Hawaii 96813

EXISTING CONDITIONS: (Please refer to Figure 3-2)

Subarea No. 1:

$Area_1$ = 5237.55 sf = 0.12 Ac.
C = 0.90 From Table 2, Rules of the Design of Storm Drainage Facilities (RDSDF)
Δ Length = 180.00 ft.
Δ Height = 18.00 ft.
% Slope = 10.00
T_C = 16.80 min. From Plate 1, (RDSDF)
I = 3.61 in/hr. Rainfall Intensity from Plate 2, RDSDF
Q_{area1} = C*i*A = 0.9*3.61*0.12
= 0.39 cfs

Subarea No. 2:

$Area_2$ = 18273.83 sf = 0.42 Ac.
$A_{PAVEMENT}$ = 8086.17 sf = 0.19 Ac.
A_{ROOF} = 10187.66 sf = 0.23 Ac.
$C_{PAVEMENT}$ = 0.90 From Table 2, Rules of the Design of Storm Drainage Facilities (RDSDF)
C_{ROOF} = 0.95 From Table 2, Rules of the Design of Storm Drainage Facilities (RDSDF)
$C_W = (A_{ROOF}*C_{ROOF}+A_{PAVEMENT}*C_{PAVEMENT})/AREA_2 = 0.93$
Δ Length = 140.00 ft.
Δ Height = 6.50 ft.
% Slope = 4.64
T_C = 20.00 min. From Plate 1, (RDSDF)
I = 3.28 in/hr. Rainfall Intensity from Plate 2, RDSDF
Q_{area2} = C*i*A = 0.93*3.28*0.42
= 1.28 cfs

Subarea No. 3:

$Area_3$ = 4035.94 sf = 0.09 Ac.
C = 0.40 From Table 2, Rules of the Design of Storm Drainage Facilities (RDSDF)
Δ Length = 95.00 ft.
Δ Height = 10.89 ft.

% Slope = 11.46
T_C = 15.50 min. From Plate 1, (RDSDF)
I = 3.65 in/hr. Rainfall Intensity from Plate 2, RDSDF

Q_{area3} = C*i*A = 0.4*3.65*0.09
= 0.14 cfs

Subarea No. 4:

$Area_4$ = 5842.07 sf = 0.13 Ac.
C = 0.40 From Table 2, Rules of the Design of Storm Drainage Facilities (RDSDF)
Δ Length = 90.00 ft.
Δ Height = 16.14 ft.
% Slope = 17.93
T_C = 15.00 min. From Plate 1, (RDSDF)
I = 3.70 in/hr. Rainfall Intensity from Plate 2, RDSDF
Q_{area4} = C*i*A = 0.4*3.7*0.13
= 0.20 cfs

Subarea No. 5:

$Area_5$ = 5562.05 sf = 0.13 Ac.
C = 0.90 From Table 2, Rules of the Design of Storm Drainage Facilities (RDSDF)
Δ Length = 190.00 ft.
Δ Height = 6.50 ft.
% Slope = 3.42
T_C = 18.00 min. From Plate 1, (RDSDF)
I = 3.40 in/hr. Rainfall Intensity from Plate 2, RDSDF
Q_{area5} = C*i*A = 0.9*3.4*0.13
= 0.39 cfs

Subarea No. 6:

$Area_6$ = 2792 sf = 0.06 Ac.
C = 0.40 From Table 2, Rules of the Design of Storm Drainage Facilities (RDSDF)
Δ Length = 52.00 ft.
Δ Height = 10.18 ft.
% Slope = 19.58
T_C = 18.50 min. From Plate 1, (RDSDF)
I = 3.30 in/hr. Rainfall Intensity from Plate 2, RDSDF
Q_{area6} = C*i*A = 0.4*3.3*0.06
= 0.08 cfs

Subarea No. 7:

$Area_7$ = 12478.64 sf = 0.29 Ac.
C = 0.90 From Table 2, Rules of the Design of Storm Drainage Facilities (RDSDF)
Δ Length = 260.00 ft.
Δ Height = 15.00 ft.
% Slope = 5.77
T_C = 15.50 min. From Plate 1, (RDSDF)
I = 3.65 in/hr. Rainfall Intensity from Plate 2, RDSDF
Q_{area7} = C*i*A = 0.9*3.65*0.29
= 0.94 cfs

Subarea No. 8:

$Area_8$ = 6151.68 sf = 0.14 Ac.
C = 0.35 From Table 2, Rules of the Design of Storm Drainage Facilities (RDSDF)
Δ Length = 80.00 ft.
Δ Height = 8.24 ft.
% Slope = 10.30
T_C = 12.50 min. From Plate 1, (RDSDF)
I = 3.80 in/hr. Rainfall Intensity from Plate 2, RDSDF
Q_{area8} = C*i*A = 0.35*3.8*0.14
= 0.19 cfs

Subarea No. 9:

$Area_9$ = 3231.14 sf = 0.07 Ac.
C = 0.40 From Table 2, Rules of the Design of Storm Drainage Facilities (RDSDF)
Δ Length = 115.00 ft.
Δ Height = 18.33 ft.
% Slope = 15.94
T_C = 11.20 min. From Plate 1, (RDSDF)
I = 3.90 in/hr. Rainfall Intensity from Plate 2, RDSDF
Q_{area9} = C*i*A = 0.4*3.9*0.07
= 0.12 cfs

Subarea No. 10:

$Area_{10}$ = 13644.35 sf = 0.31 Ac.
A_{LAWN} = 5931.22 sf = 0.14 Ac.
A_{ROOF} = 7713.13 sf = 0.18 Ac.
C_{LAWN} = 0.30 From Table 2, Rules of the Design of Storm Drainage Facilities (RDSDF)
C_{ROOF} = 0.95 From Table 2, Rules of the Design of Storm Drainage Facilities (RDSDF)
$C_W = (A_{ROOF}*C_{ROOF}+A_{LAWN}*C_{LAWN})/AREA_{10}$= 0.67
Δ Length = 80.00 ft.
Δ Height = 10.36 ft.
% Slope = 12.95
T_C = 13.50 min. From Plate 1, (RDSDF)
I = 3.80 in/hr. Rainfall Intensity from Plate 2, RDSDF
Q_{area10} = C*i*A = 0.67*3.8*0.31
= 0.79 cfs

Subarea No. 11:

$Area_{11}$ = 49959.78 sf = 1.15 Ac.
A_{LAWN} = 29344.28 sf = 0.67 Ac.
A_{ROOF} = 20615.50 sf = 0.47 Ac.
C_{LAWN} = 0.30 From Table 2, Rules of the Design of Storm Drainage Facilities (RDSDF)
C_{ROOF} = 0.95 From Table 2, Rules of the Design of Storm Drainage Facilities (RDSDF)
$C_W = (A_{ROOF}*C_{ROOF}+A_{LAWN}*C_{LAWN})/AREA_{11}$= 0.57
Δ Length = 400.00 ft.
Δ Height = 19.96 ft.
% Slope = 4.99
T_C = 7.00 min. From Plate 1, (RDSDF)
I = 5.20 in/hr. Rainfall Intensity from Plate 2, RDSDF
Q_{area10} = C*i*A = 0.57*5.2*1.15
= 3.39 cfs

Subarea No. 12:

$Area_{12}$ = 12897.25 sf = 0.30 Ac.
C = 0.05 From Table 2, Rules of the Design of Storm Drainage Facilities (RDSDF)
Δ Length = 75.00 ft.
Δ Height = 12.10 ft.
% Slope = 16.13
T_C = 16.00 min. From Plate 1, (RDSDF)

I = 3.60 in/hr. Rainfall Intensity from Plate 2, RDSDF

Q_{area12} = C*i*A = 0.05*3.60*0.3

= 0.05 cfs

Subarea No. 13:

$Area_{13}$ = 15148 sf = 0.35 Ac.

$A_{TILE/PAV.}$ = 5376.54 sf = 0.12 Ac.

A_{ROOF} = 9771.46 sf = 0.22 Ac.

$C_{TILE/PAV.}$ = 0.70 From Table 2, Rules of the Design of Storm Drainage Facilities (RDSDF)

C_{ROOF} = 0.95 From Table 2, Rules of the Design of Storm Drainage Facilities (RDSDF)

$C_W = (A_{ROOF}*C_{ROOF}+A_{TILE/PAV.}*C_{TILE/PAV.})/AREA_{13}$= 0.86

Δ Length = 60.00 ft.

Δ Height = 0.67 ft.

% Slope = 1.12

T_C = 33.00 min. From Plate 1, (RDSDF)

I = 2.60 in/hr. Rainfall Intensity from Plate 2, RDSDF

Q_{area13} = C*i*A = 0.86*2.6*0.35

= 0.78 cfs

Subarea No. 14:

$Area_{14}$ = 29454 sf = 0.68 Ac.

$A_{PAVEMENT}$ = 19080.36 sf = 0.44 Ac.

A_{ROOF} = 10373.64 sf = 0.24 Ac.

$C_{PAVEMENT}$ = 0.90 From Table 2, Rules of the Design of Storm Drainage Facilities (RDSDF)

C_{ROOF} = 0.95 From Table 2, Rules of the Design of Storm Drainage Facilities (RDSDF)

$C_W = (A_{ROOF}*C_{ROOF}+A_{PAVEMENT}*C_{PAVEMENT})/AREA_{14}$= 0.92

Δ Length = 320.00 ft.

Δ Height = 26.65 ft.

% Slope = 8.33

T_C = 13.10 min. From Plate 1, (RDSDF)

I = 3.80 in/hr. Rainfall Intensity from Plate 2, RDSDF

Q_{area14} = C*i*A = 0.92*3.8*0.68

= 2.36 cfs

Subarea No. 15:

$Area_{15}$ = 3002.88 sf = 0.07 Ac.
C = 0.40 From Table 2, Rules of the Design of Storm Drainage Facilities (RDSDF)
Δ Length = 210.00 ft.
Δ Height = 24.00 ft.
% Slope = 11.43
T_C = 11.20 min. From Plate 1, (RDSDF)
I = 3.90 in/hr. Rainfall Intensity from Plate 2, RDSDF
Q_{area15} = C*i*A = 0.4*39*0.07
= 0.11 cfs

Subarea No. 16:

$Area_{16}$ = 1917.45 sf = 0.04 Ac.
C = 0.40 From Table 2, Rules of the Design of Storm Drainage Facilities (RDSDF)
Δ Length = 55.00 ft.
Δ Height = 7.24 ft.
% Slope = 13.16
T_C = 19.50 min. From Plate 1, (RDSDF)
I = 3.25 in/hr, Rainfall Intensity from Plate 2, RDSDF
Q_{area16} = C*i*A = 0.4*3.25*0.04
= 0.06 cfs

Subarea No. 17:

$Area_{17}$ = 4617.27 sf = 0.11 Ac.
A_{SOIL}= 2199.31 sf = 0.05 Ac.
A_{ROOF} = 2417.96 sf = 0.06 Ac.
C_{SOIL}= 0.40 From Table 2, Rules of the Design of Storm Drainage Facilities (RDSDF)
C_{ROOF} = 0.95 From Table 2, Rules of the Design of Storm Drainage Facilities (RDSDF)
$C_W = (A_{ROOF}*C_{ROOF}+A_{SOIL}*C_{SOIL})/AREA_2$= 0.69
Δ Length = 57.00 ft.
Δ Height = 4.08 ft.
% Slope = 7.16
T_C = 19.00 min. From Plate 1, (RDSDF)
I =3.40 in/hr. Rainfall Intensity from Plate 2, RDSDF
$Qarea_{17}$ = C*i*A = 0.69*3.4*0.11
= 0.25 cfs

Subarea No. 18:

$Area_{18}$ = 466.33 sf = 0.01 Ac.
C = 0.40 From Table 2, Rules of the Design of Storm Drainage Facilities (RDSDF) Δ
Length = 35.00 ft.
Δ Height = 10.20 ft.
% Slope = 29.14
T_C = 21.00 min. From Plate 1, (RDSDF)
I = 3.20 in/hr. Rainfall Intensity from Plate 2, RDSDF

Q_{area18} = C*i*A = 0.4*3.2*0.01
= 0.01 cfs

Q_{Total} =11.53 cfs

FUTURE CONDITIONS: (Please refer to Figure 3-4)

Subarea No. 1:

$Area_1$ = 5237.55 sf = 0.12 Ac.
C = 0.90 From Table 2, Rules of the Design of Storm Drainage Facilities (RDSDF)
Δ Length = 180.00 ft.
Δ Height = 18.00 ft.
% Slope = 10.00
T_C = 16.80 min. From Plate 1, (RDSDF)
i = 3.61 in/hr. Rainfall Intensity from Plate 2, RDSDF
Q_{area1} = C*i*A = 0.9*3.61*0.12
= 0.39 cfs

Subarea No. 2:

$Area_2$ = 18273.83 sf = 0.42 Ac.
$A_{PAVEMENT}$ = 8086.17 sf = 0.19 Ac.
A_{ROOF} = 10187.66 sf = 0.23 Ac.
$C_{PAVEMENT}$ = 0.90 From Table 2, Rules of the Design of Storm Drainage Facilities (RDSDF)
C_{ROOF} = 0.95 From Table 2, Rules of the Design of Storm Drainage Facilities (RDSDF)
$C_W = (A_{ROOF}*C_{ROOF}+A_{PAVEMENT}*C_{PAVEMENT})/AREA_2$ = 0.93
Δ Length = 140.00 ft.
Δ Height = 6.50 ft.
% Slope = 4.64
T_C = 20.00 min. From Plate 1, (RDSDF)
I = 3.28 in/hr. Rainfall Intensity from Plate 2, RDSDF
Q_{area2}= C*i*A = 0.93*3.28*0.42
= 1.28 cfs

Subarea No. 3:

$Area_3$ = 4035.94 sf = 0.09 Ac.
C = 0.40 From Table 2, Rules of the Design of Storm Drainage Facilities (RDSDF)
Δ Length = 95.00 ft.
Δ Height = 10.89 ft.
% Slope = 11.46
T_C = 15.50 min. From Plate 1, (RDSDF)
I = 3.65 in/hr. Rainfall Intensity from Plate 2, RDSDF
Q_{area3} = C*i*A = 0.4*3.65*0.09

= 0.14 cfs

Subarea No. 4:

$Area_4$ = 5842.07 sf = 0.13 Ac.
C = 0.40 From Table 2, Rules of the Design of Storm Drainage Facilities (RDSDF)
Δ Length = 90.00 ft.
Δ Height = 16.14 ft.
% Slope = 17.93
T_C = 15.00 min. From Plate 1, (RDSDF)
I = 3.70 in/hr. Rainfall Intensity from Plate 2, RDSDF
Q_{area4} = C*i*A = 0.4*3.7*0.13
= 0.20 cfs

Subarea No. 5:

$Area_5$ = 5562.05 sf = 0.13 Ac.
C = 0.90 From Table 2, Rules of the Design of Storm Drainage Facilities (RDSDF)
Δ Length = 190.00 ft.
Δ Height = 6.50 ft.
% Slope = 3.42
T_C = 18.00 min. From Plate 1, (RDSDF)
I = 3.40 in/hr. Rainfall Intensity from Plate 2, RDSDF
Q_{area5} = C*i*A = 0.9*3.4*0.13
= 0.39 cfs

Subarea No. 6:

$Area_6$ = 2792 sf = 0.06 Ac.
C = 0.40 From Table 2, Rules of the Design of Storm Drainage Facilities (RDSDF)
Δ Length = 52.00 ft.
Δ Height = 10.18 ft.
% Slope = 19.58
T_C = 18.50 min. From Plate 1, (RDSDF)
I = 3.30 in/hr. Rainfall Intensity from Plate 2, RDSDF
Q_{area6} = C*i*A = 0.4*3.3*0.06
= 0.08 cfs

Subarea No. 7:

$Area_7$ = 12478.64 sf = 0.29 Ac.
C = 0.90 From Table 2, Rules of the Design of Storm Drainage Facilities (RDSDF)
Δ Length = 260.00 ft.
Δ Height = 15.00 ft.
% Slope = 5.77
T_C = 15.50 min. From Plate 1, (RDSDF)
I = 3.65 in/hr. Rainfall Intensity from Plate 2, RDSDF
Q_{area7} = C*i*A = 0.9*3.65*0.29
= 0.94 cfs

Subarea No. 8:

$Area_8$ = 6151.68 sf = 0.14 Ac.
C = 0.35 From Table 2, Rules of the Design of Storm Drainage Facilities (RDSDF)
Δ Length = 80.00 ft.
Δ Height = 8.24 ft.
% Slope = 10.30
T_C = 12.50 min. From Plate 1, (RDSDF)
I = 3.80 in/hr. Rainfall Intensity from Plate 2, RDSDF
Q_{area8} = C*i*A = 0.35*3.8*0.14
= 0.19 cfs

Subarea No. 9:

$Area_9$ = 3231.14 sf = 0.07 Ac.
C = 0.40 From Table 2, Rules of the Design of Storm Drainage Facilities (RDSDF)
Δ Length = 115.00 ft.
Δ Height = 18.33 ft.
% Slope = 15.94
T_C = 11.20 min. From Plate 1, (RDSDF)
i = 3.90 in/hr. Rainfall Intensity from Plate 2, RDSDF
Q_{area9} = C*i*A = 0.4*3.9*0.07
= 0.12 cfs

Subarea No. 10:

$Area_{10}$ = 13644.35 sf = 0.31 Ac.
A_{LAWN} = 5931.22 sf = 0.14 Ac.
A_{ROOF} = 7713.13 sf = 0.18 Ac.
C_{LAWN} = 0.30 From Table 2, Rules of the Design of Storm Drainage Facilities (RDSDF)
C_{ROOF} = 0.95 From Table 2, Rules of the Design of Storm Drainage Facilities (RDSDF)
$C_W = (A_{ROOF}*C_{ROOF}+A_{LAWN}*C_{LAWN})/AREA_{10}$= 0.67
Δ Length = 80.00 ft.
Δ Height = 10.36 ft.
% Slope = 12.95
T_C = 13.50 min. From Plate 1, (RDSDF)
I = 3.80 in/hr. Rainfall Intensity from Plate 2, RDSDF
Q_{area10} = C*i*A = 0.67*3.8*0.31
= 0.79 cfs

Subarea No. 11:

$Area_{11}$ = 47438.49 sf = 1.09 Ac.
A_{LAWN} = 26822.99 sf = 0.62 Ac.
A_{ROOF} = 20615.50 sf = 0.47 Ac.
C_{LAWN} = 0.30 From Table 2, Rules of the Design of Storm Drainage Facilities (RDSDF)
C_{ROOF} = 0.95 From Table 2, Rules of the Design of Storm Drainage Facilities (RDSDF)
$C_W = (A_{ROOF}*C_{ROOF}+A_{LAWN}*C_{LAWN})/AREA_{11}$= 0.58
Δ Length = 400.00 ft.
Δ Height = 19.96 ft.
% Slope = 4.99
T_C = 7.00 min. From Plate 1, (RDSDF)
I = 5.20 in/hr. Rainfall Intensity from Plate 2, RDSDF
Q_{area10} = C*i*A = 0.58*5.2*1.09
= 3.3 cfs

Subarea No. 12:

$Area_{12}$ = 17952.64 sf = 0.41 Ac.
C = 0.05 From Table 2, Rules of the Design of Storm Drainage Facilities (RDSDF)
Δ Length = 82.00 ft.
Δ Height = 12.60 ft.
% Slope = 15.37
T_C = 15.00 min. From Plate 1, (RDSDF)

I = 3.58 in/hr. Rainfall Intensity from Plate 2, RDSDF

Q_{area12} = C*i*A = 0.05*3.580*0.41

= 0.07 cfs

Subarea No. 13:

$Area_{13}$ = 12635 sf = 0.29 Ac.

$A_{TILE/PAV.}$ = 2863.54 sf = 0.07 Ac.

A_{ROOF} = 9771.46 sf = 0.22 Ac.

$C_{TILE/PAV.}$ = 0.70 From Table 2, Rules of the Design of Storm Drainage Facilities (RDSDF)

C_{ROOF} = 0.95 From Table 2, Rules of the Design of Storm Drainage Facilities (RDSDF)

$C_W = (A_{ROOF}*C_{ROOF}+A_{TILE/PAV.}*C_{TILE/PAV.})/AREA_{13}$= 0.89

Δ Length = 60.00 ft.

Δ Height = 0.67 ft.

% Slope = 1.12

T_C = 33.00 min. From Plate 1, (RDSDF)

I = 2.60 in/hr. Rainfall Intensity from Plate 2, RDSDF

Q_{area13} = C*i*A = 0.86*2.6*0.29

= 0.67 cfs

Subarea No. 14:

$Area_{14}$ = 29454 sf = 0.68 Ac.

$A_{PAVEMENT}$ = 19080.36 sf = 0.44 Ac.

A_{ROOF} = 10373.64 sf = 0.24 Ac.

$C_{PAVEMENT}$ = 0.90 From Table 2, Rules of the Design of Storm Drainage Facilities (RDSDF)

C_{ROOF} = 0.95 From Table 2, Rules of the Design of Storm Drainage Facilities (RDSDF)

$C_W = (A_{ROOF}*C_{ROOF}+A_{PAVEMENT}*C_{PAVEMENT})/AREA_{14}$= 0.92

Δ Length = 320.00 ft.

Δ Height = 26.65 ft.

% Slope = 8.33

T_C = 13.10 min. From Plate 1, (RDSDF)

I = 3.80 in/hr. Rainfall Intensity from Plate 2, RDSDF

Q_{area14} = C*i*A = 0.92*3.8*0.68

= 2.36 cfs

Subarea No. 15:

$Area_{15}$ = 3002.88 sf = 0.07 Ac.
C = 0.40 From Table 2, Rules of the Design of Storm Drainage Facilities (RDSDF)
Δ Length = 210.00 ft.
Δ Height = 24.00 ft.
% Slope = 11.43
T_C = 11.20 min. From Plate 1, (RDSDF)
I = 3.90 in/hr. Rainfall Intensity from Plate 2, RDSDF
Q_{area15} = C*i*A = 0.4*39*0.07
= 0.11 cfs

Subarea No. 16:

$Area_{16}$ = 1917.45 sf = 0.04 Ac.
C = 0.40 From Table 2, Rules of the Design of Storm Drainage Facilities (RDSDF)
Δ Length = 55.00 ft.
Δ Height = 7.24 ft.
% Slope = 13.16
T_C = 19.50 min. From Plate 1, (RDSDF)
I = 3.25 in/hr, Rainfall Intensity from Plate 2, RDSDF
Q_{area16} = C*i*A = 0.4*3.25*0.04
= 0.06 cfs

Subarea No. 17:

$Area_{17}$ = 4617.27 sf = 0.11 Ac.
A_{SOIL}= 2199.31 sf = 0.05 Ac.
A_{ROOF} = 2417.96 sf = 0.06 Ac.
C_{SOIL}= 0.40 From Table 2, Rules of the Design of Storm Drainage Facilities (RDSDF)
C_{ROOF} = 0.95 From Table 2, Rules of the Design of Storm Drainage Facilities (RDSDF)
$C_W = (A_{ROOF}*C_{ROOF}+A_{SOIL}*C_{SOIL})/AREA_2$= 0.69
Δ Length = 57.00 ft.
Δ Height = 4.08 ft.
% Slope = 7.16
T_C = 19.00 min. From Plate 1, (RDSDF)
I =3.40 in/hr. Rainfall Intensity from Plate 2, RDSDF
$Qarea_{17}$ = C*i*A = 0.69*3.4*0.11
= 0.25 cfs

Subarea No. 18:

$Area_{18}$ = 466.33 sf = 0.01 Ac.
C = 0.40 From Table 2, Rules of the Design of Storm Drainage Facilities (RDSDF)
Δ Length = 35.00 ft.
Δ Height = 10.20 ft.
% Slope = 29.14
T_C = 21.00 min. From Plate 1, (RDSDF)
I = 3.20 in/hr. Rainfall Intensity from Plate 2, RDSDF

Q_{area18} = C*i*A = 0.4*3.2*0.01
= 0.01 cfs

Q_{Total} =11.35 cfs

Δ Q = 0.18 cfs Amount of runoff reduction under Future conditions, or (0.18/11.53)* 100=1.56%

APPENDIX B

Hydraulic Calculations for Drain Pipes and Channels

Marc M. Siah & Associates, Inc.

Consulting Civil • Structural • Environmental & Ocean Engineers
820 South Beretania Street, Suite 201, Honolulu, Hawaii 96813

36-INCH STORM DRAIN LINE # 1
Worksheet for Circular Channel

Project Description	
Project File	c:\haestad\academic\fmw\project1.fm2
Worksheet	KAHANA SUNSET STORM DRAIN SYSTEM
Flow Element	Circular Channel
Method	Manning's Formula
Solve For	Channel Depth

Input Data		
Mannings Coefficient	0.013	
Channel Slope	0.039000	ft/ft
Diameter	36.00	in
Discharge	45.42	cfs

Results		
Depth	1.22	ft
Flow Area	2.69	ft^2
Wetted Perimeter	4.14	ft
Top Width	2.95	ft
Critical Depth	2.20	ft
Percent Full	40.51	
Critical Slope	0.005911	ft/ft
Velocity	16.92	ft/s
Velocity Head	4.45	ft
Specific Energy	5.66	ft
Froude Number	3.12	
Maximum Discharge	141.68	cfs
Full Flow Capacity	131.71	cfs
Full Flow Slope	0.004638	ft/ft
Flow is supercritical.		

36-INCH STORM DRAIN LINE # 2
Worksheet for Circular Channel

Project Description	
Project File	c:\haestad\academic\fmw\project1.fm2
Worksheet	KAHANA SUNSET STORM DRAIN SYSTEM
Flow Element	Circular Channel
Method	Manning's Formula
Solve For	Channel Depth

Input Data		
Mannings Coefficient	0.013	
Channel Slope	0.043000	ft/ft
Diameter	36.00	in
Discharge	45.42	cfs

Results		
Depth	1.18	ft
Flow Area	2.59	ft²
Wetted Perimeter	4.07	ft
Top Width	2.93	ft
Critical Depth	2.20	ft
Percent Full	39.44	
Critical Slope	0.005911	ft/ft
Velocity	17.53	ft/s
Velocity Head	4.78	ft
Specific Energy	5.96	ft
Froude Number	3.29	
Maximum Discharge	148.77	cfs
Full Flow Capacity	138.30	cfs
Full Flow Slope	0.004638	ft/ft
Flow is supercritical.		

30-INCH STORM DRAIN LINE # 3
Worksheet for Circular Channel

Project Description	
Project File	c:\haestad\academic\fmw\project1.fm2
Worksheet	KAHANA SUNSET STORM DRAIN SYSTEM
Flow Element	Circular Channel
Method	Manning's Formula
Solve For	Channel Depth

Input Data		
Mannings Coefficient	0.013	
Channel Slope	0.389000	ft/ft
Diameter	30.00	in
Discharge	9.12	cfs

Results		
Depth	0.32	ft
Flow Area	0.37	ft^2
Wetted Perimeter	1.84	ft
Top Width	1.68	ft
Critical Depth	1.01	ft
Percent Full	12.92	
Critical Slope	0.004244	ft/ft
Velocity	24.55	ft/s
Velocity Head	9.37	ft
Specific Energy	9.69	ft
Froude Number	9.20	
Maximum Discharge	275.18	cfs
Full Flow Capacity	255.81	cfs
Full Flow Slope	0.000494	ft/ft
Flow is supercritical.		

24-INCH STORM DRAIN LINE # 4
Worksheet for Circular Channel

Project Description	
Project File	c:\haestad\academic\fmw\project1.fm2
Worksheet	KAHANA SUNSET STORM DRAIN SYSTEM
Flow Element	Circular Channel
Method	Manning's Formula
Solve For	Channel Depth

Input Data		
Mannings Coefficient	0.013	
Channel Slope	0.083000	ft/ft
Diameter	24.00	in
Discharge	55.13	cfs

Results		
Depth	1.41	ft
Flow Area	2.37	ft²
Wetted Perimeter	3.99	ft
Top Width	1.82	ft
Critical Depth	1.99	ft
Percent Full	70.56	
Critical Slope	0.055461	ft/ft
Velocity	23.27	ft/s
Velocity Head	8.41	ft
Specific Energy	9.82	ft
Froude Number	3.60	
Maximum Discharge	70.10	cfs
Full Flow Capacity	65.17	cfs
Full Flow Slope	0.059394	ft/ft
Flow is supercritical.		

36-INCH SDL #5, STA 0+00 TO STA. 0+188.1
Worksheet for Circular Channel

Project Description	
Project File	c:\haestad\academic\fmw\project1.fm2
Worksheet	KAHANA SUNSET STORM DRAIN SYSTEM
Flow Element	Circular Channel
Method	Manning's Formula
Solve For	Channel Depth

Input Data		
Mannings Coefficient	0.013	
Channel Slope	0.008000	ft/ft
Diameter	36.00	in
Discharge	55.13	cfs

Results		
Depth	2.28	ft
Flow Area	5.75	ft^2
Wetted Perimeter	6.34	ft
Top Width	2.57	ft
Critical Depth	2.41	ft
Percent Full	75.88	
Critical Slope	0.007096	ft/ft
Velocity	9.58	ft/s
Velocity Head	1.43	ft
Specific Energy	3.70	ft
Froude Number	1.13	
Maximum Discharge	64.17	cfs
Full Flow Capacity	59.65	cfs
Full Flow Slope	0.006833	ft/ft
Flow is supercritical.		

36-INCH SDL #5, STA 1+88.1 TO OUTLET
Worksheet for Circular Channel

Project Description	
Project File	c:\haestad\academic\fmw\project1.fm2
Worksheet	KAHANA SUNSET STORM DRAIN SYSTEM
Flow Element	Circular Channel
Method	Manning's Formula
Solve For	Channel Depth

Input Data		
Mannings Coefficient	0.013	
Channel Slope	0.008000	ft/ft
Diameter	36.00	in
Discharge	59.08	cfs

Results		
Depth	2.43	ft
Flow Area	6.14	ft²
Wetted Perimeter	6.73	ft
Top Width	2.35	ft
Critical Depth	2.49	ft
Percent Full	81.10	
Critical Slope	0.007702	ft/ft
Velocity	9.62	ft/s
Velocity Head	1.44	ft
Specific Energy	3.87	ft
Froude Number	1.05	
Maximum Discharge	64.17	cfs
Full Flow Capacity	59.65	cfs
Full Flow Slope	0.007847	ft/ft
Flow is supercritical.		

6-INCH STORM DRAIN LINE # 6
Worksheet for Circular Channel

Project Description	
Project File	c:\haestad\academic\fmw\project1.fm2
Worksheet	KAHANA SUNSET STORM DRAIN SYSTEM
Flow Element	Circular Channel
Method	Manning's Formula
Solve For	Full Flow Diameter

Input Data		
Mannings Coefficient	0.013	
Channel Slope	0.213000	ft/ft
Discharge	3.95	cfs

Results		
Depth	7.0	in
Diameter	7.03	in
Flow Area	0.27	ft²
Wetted Perimeter	1.84	ft
Top Width	0.00	ft
Critical Depth	0.59	ft
Percent Full	100.00	
Critical Slope	0.206816	ft/ft
Velocity	14.66	ft/s
Velocity Head	3.34	ft
Specific Energy	FULL	ft
Froude Number	FULL	
Maximum Discharge	4.25	cfs
Full Flow Capacity	3.95	cfs
Full Flow Slope	0.213000	ft/ft

Notes:

SHOWS THAT 6-INCH LINE IS NOT ADEQUATE!
LARGER SIZE PIPE IS REQUIRED.

8-INCH STORM DRAIN LINE # 6
Worksheet for Circular Channel

Project Description	
Project File	c:\haestad\academic\fmw\project1.fm2
Worksheet	KAHANA SUNSET STORM DRAIN SYSTEM
Flow Element	Circular Channel
Method	Manning's Formula
Solve For	Channel Depth

Input Data		
Mannings Coefficient	0.013	
Channel Slope	0.213000	ft/ft
Diameter	8.00	in
Discharge	3.95	cfs

Results		
Depth	5.0	in
Flow Area	0.23	ft²
Wetted Perimeter	1.21	ft
Top Width	0.65	ft
Critical Depth	0.66	ft
Percent Full	62.14	
Critical Slope	0.101093	ft/ft
Velocity	17.33	ft/s
Velocity Head	4.67	ft
Specific Energy	5.08	ft
Froude Number	5.15	
Maximum Discharge	6.00	cfs
Full Flow Capacity	5.58	cfs
Full Flow Slope	0.106859	ft/ft
Flow is supercritical.		

12-INCH STORM DRAIN LINE # 7
Worksheet for Circular Channel

Project Description	
Project File	c:\haestad\academic\fmw\project1.fm2
Worksheet	KAHANA SUNSET STORM DRAIN SYSTEM
Flow Element	Circular Channel
Method	Manning's Formula
Solve For	Channel Depth

Input Data		
Mannings Coefficient	0.013	
Channel Slope	0.063000	ft/ft
Diameter	12.00	in
Discharge	1.02	cfs

Results		
Depth	2.7	in
Flow Area	0.13	ft²
Wetted Perimeter	1.00	ft
Top Width	0.84	ft
Critical Depth	0.42	ft
Percent Full	22.81	
Critical Slope	0.005824	ft/ft
Velocity	7.57	ft/s
Velocity Head	0.89	ft
Specific Energy	1.12	ft
Froude Number	3.33	
Maximum Discharge	9.62	cfs
Full Flow Capacity	8.94	cfs
Full Flow Slope	0.000820	ft/ft
Flow is supercritical.		

6-INCH STORM DRAIN LINE # 8
Worksheet for Circular Channel

Project Description	
Project File	c:\haestad\academic\fmw\project1.fm2
Worksheet	KAHANA SUNSET STORM DRAIN SYSTEM
Flow Element	Circular Channel
Method	Manning's Formula
Solve For	Channel Depth

Input Data		
Mannings Coefficient	0.013	
Channel Slope	0.382000	ft/ft
Diameter	6.00	in
Discharge	0.59	cfs

Results		
Depth	1.7	in
Flow Area	0.04	ft²
Wetted Perimeter	0.56	ft
Top Width	0.45	ft
Critical Depth	0.39	ft
Percent Full	27.91	
Critical Slope	0.012126	ft/ft
Velocity	13.17	ft/s
Velocity Head	2.70	ft
Specific Energy	2.83	ft
Froude Number	7.35	
Maximum Discharge	3.73	cfs
Full Flow Capacity	3.47	cfs
Full Flow Slope	0.011058	ft/ft
Flow is supercritical.		

Channel N0. 1 - Sta. 0+00 to Sta. 0+31.7
Worksheet for Rectangular Channel

Project Description	
Project File	k:\1281\reports\drainage report\kahana s.fm2
Worksheet	Kahana Sunset Cobbled Open Channels
Flow Element	Rectangular Channel
Method	Manning's Formula
Solve For	Channel Depth

Input Data		
Mannings Coefficient	0.035	
Channel Slope	0.346000	ft/ft
Bottom Width	2.00	ft
Discharge	1.02	cfs

Results		
Depth	0.10	ft
Flow Area	0.20	ft²
Wetted Perimeter	2.20	ft
Top Width	2.00	ft
Critical Depth	0.20	ft
Critical Slope	0.038909	ft/ft
Velocity	5.07	ft/s
Velocity Head	0.40	ft
Specific Energy	0.50	ft
Froude Number	2.82	
Flow is supercritical.		

Channel N0. 1 - Sta. 0+31.7 to Sta. 0+76
Worksheet for Rectangular Channel

Project Description	
Project File	k:\1281\reports\drainage report\kahana s.fm2
Worksheet	Kahana Sunset Cobbled Open Channels
Flow Element	Rectangular Channel
Method	Manning's Formula
Solve For	Channel Depth

Input Data		
Mannings Coefficient	0.035	
Channel Slope	0.190000	ft/ft
Bottom Width	2.00	ft
Discharge	1.02	cfs

Results		
Depth	0.12	ft
Flow Area	0.24	ft^2
Wetted Perimeter	2.24	ft
Top Width	2.00	ft
Critical Depth	0.20	ft
Critical Slope	0.038909	ft/ft
Velocity	4.20	ft/s
Velocity Head	0.27	ft
Specific Energy	0.40	ft
Froude Number	2.13	
Flow is supercritical.		

Channel No. 2 - Sta. 0+00 to Sta. 0+47.8
Worksheet for Rectangular Channel

Project Description	
Project File	k:\1281\reports\drainage report\kahana s.fm2
Worksheet	Kahan Sunset Strom Channels
Flow Element	Rectangular Channel
Method	Manning's Formula
Solve For	Channel Depth

Input Data		
Mannings Coefficient	0.035	
Channel Slope	0.123000	ft/ft
Bottom Width	2.00	ft
Discharge	0.12	cfs

Results		
Depth	0.04	ft
Flow Area	0.07	ft^2
Wetted Perimeter	2.07	ft
Top Width	2.00	ft
Critical Depth	0.05	ft
Critical Slope	0.052231	ft/ft
Velocity	1.62	ft/s
Velocity Head	0.04	ft
Specific Energy	0.08	ft
Froude Number	1.48	
Flow is supercritical.		

CHANNEL # 2, STA. 0+47.8 TO STA. 0+78.3
Worksheet for Rectangular Channel

Project Description	
Project File	c:\haestad\academic\fmw\project1.fm2
Worksheet	KAHANA SUNSET COBBLED OPEN CHANNELS
Flow Element	Rectangular Channel
Method	Manning's Formula
Solve For	Channel Depth

Input Data		
Mannings Coefficient	0.035	
Channel Slope	0.118000	ft/ft
Bottom Width	2.00	ft
Discharge	3.59	cfs

Results		
Depth	0.32	ft
Flow Area	0.64	ft^2
Wetted Perimeter	2.64	ft
Top Width	2.00	ft
Critical Depth	0.46	ft
Critical Slope	0.038332	ft/ft
Velocity	5.65	ft/s
Velocity Head	0.50	ft
Specific Energy	0.81	ft
Froude Number	1.77	
Flow is supercritical.		

Determination of Drain Lines Flows:

$Qsubarea_{1} = 0.39$
$Qsubarea_{2} = 1.28$
$Qsubarea_{3} = 0.14$
$Qsubarea_{4} = 0.20$
$Qsubarea_{5} = 0.39$
$Qsubarea_{6} = 0.08$
$Qsubarea_{7} = 0.94$
$Qsubarea_{8} = 0.19$
$Qsubarea_{9} = 0.12$
$Qsubarea_{10} = 0.79$
$Qsubarea_{11} = 3.39$
$Qsubarea_{12} = 0.05$
$Qsubarea_{13} = 0.78$
$Qsubarea_{14} = 2.36$
$Qsubarea_{15} = 0.11$
$Qsubarea_{16} = 0.06$
$Qsubarea_{17} = 0.25$
$Qsubarea_{18} = 0.01$
$Q_{Napili\ Villas} = 44.00$
$Q_{Road\ ROW} = 9.12$
$Q_{on\text{-}site} = 11.53$
$Q_{off\text{-}site} = 53.12$
$Q_{total} = 64.65$
$Q_{line\ 1} = Q_{Napili\ Villas} + Q_{subarea\ 2} + Q_{subarea\ 3} = 45.42$ cfs
$Q_{line\ 2} = Q_{line\ 1} = 45.42$ cfs
$Q_{Line\ 3} = 9.12$ cfs (from Lower Honoapiilani ROW)
$Q_{Line\ 4} = Q_{Line\ 2} + Q_{Line\ 3} + Q_{Line\ 8} = 55.13$ cfs
$Q_{Line\ 5\ up\ to\ Sta.\ 1+88} = Q_{Line\ 4} = 55.13$ cfs
$Q_{Line\ 5\ from\ Sta.\ 1+88\ to\ Sta.\ 3+05.1} = Q_{Line\ 5\ up\ to\ Sta.\ 1+88} + Q_{Line\ 6} = 59.08$
$Q_{Line\ 6} = Qsubarea_{1} + Qsubarea_{13} + Qsubarea_{14} + Qsubarea_{15} + Qsubarea_{16} + Qsubarea_{17}$
$= 3.95$ cfs
$Q_{Line\ 7} = Q_{subarea\ 6} + Qsubarea_{7} = 1.02$ cfs
$Q_{Line\ 8} = Qsubarea_{5} + Qsubarea_{4} = 0.59$ cfs
$Q_{Channel\ 1} = Qsubarea_{6} + Qsubarea_{7} = 1.02$ cfs
$Q_{Channel\ 2\ to\ Sta.\ 0+47} = Qsubarea_{9} = 0.12$ cfs
$Q_{Channel\ 2\ from\ Sta.\ 0+47\ to\ Outlet} = Qsubarea_{8} + Qsubarea_{11} + Qsubarea_{18} = 3.59$ cfs

`

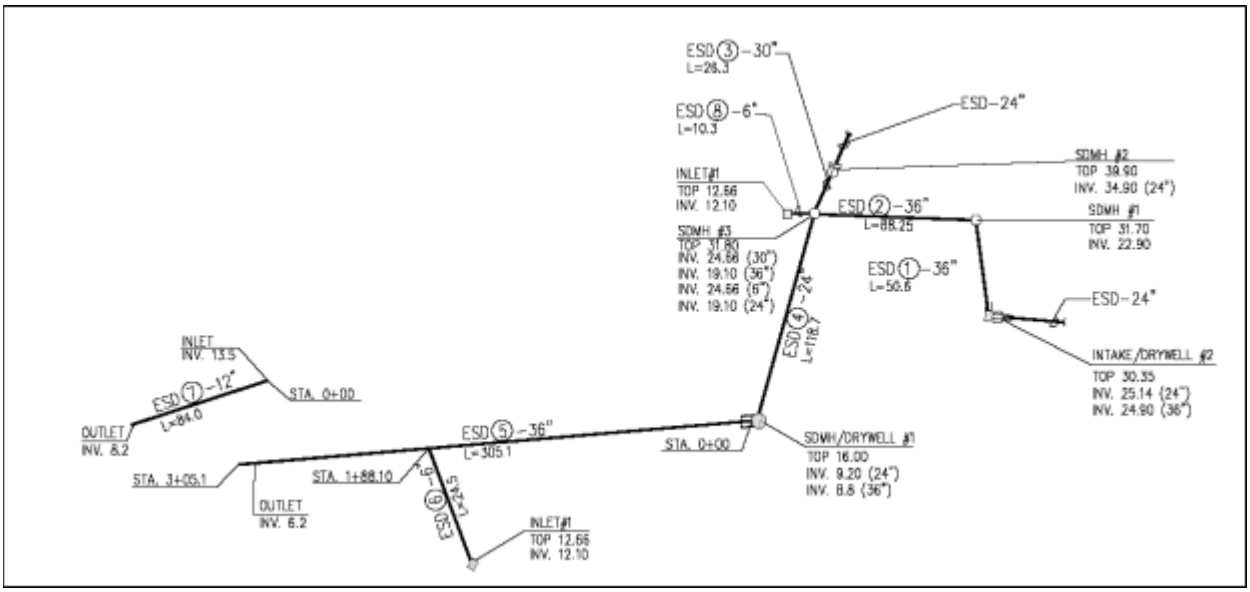

Fig. 1 Existing Storm Drain System at Kahana Sunset

<u>Calculations for Manhole Losses:</u>

Use Rules Relating to Storm Drainage Standards,
Dept. of Planning & Permitting, City and County of Honolulu (attached)

<u>Losses at Intake/Dry Well #1:</u>

Entrance and Exit Loss - "A"

A_{24}, incoming = 3.14
A_{36}, outgoing = 7.065
Incoming Flow = 44 cfs, V_1 = 14.01 fps
Outgoing Flow = 45.42 cfs V_2 = 6.43 fps
Use higher velocity, V_1, and from Plate 17, Curve "C", "h_A" = 0.65
h_A = 0.65

Velocity Head Loss - "B"

Use curve "B" from Plate 17, to determine h_v
Since V_2 is smaller than V_1, then h_B = 0.0
h_B = 0.00

Directional Change Loss - "C"

Use higher velocity,V_2 , and from Plate 17, Curve "C", "h" = 0.65
for 90 change in flow direction, h_C =2h=$h_{C = 1.3}$

Loss Due to Incoming Volume - "D"

Qbranch/Q_1 = 0.03 From Plate 18, for V_1 = 14 fps, h_D = 0.05

TOTAL LOSS = A+B+C+D= 2.00 ft

<u>SDMH # 1:</u>

Entrance and Exit Loss - "A"

V_1= Incoming Flow/Area = 6.42887473 fps
V_2 = Outgoing Flow/Area = 6.42887473 fps
Use higher velocity,V_2 , and from Plate 17, Curve "C", "h_A" = 0.12
h_A = 0.12

Velocity Head Loss - "B"

`

Use curve "B" from Plate 17, to determine h_v
Since V_2 is equal to V1, then h_B = h_{B2} - h_{B1}=0
h_{B1} = 0.65
h_{B2} = 0.65
h_B = 0

Directional Change Loss - "C"

Use higher velocity,V_2 , and from Plate 17, Curve "C", "h" = 0.12
for 90 change in flow direction, h_C=2h=
h_C = 0.24

Loss Due to Incoming Volume - "D"

h_D = 0 there is no branch flow

TOTAL LOSS = A+B+C+D= 0.36 ft

SDMH # 2:

Entrance and Exit Loss - "A"

V_1 = Incoming Flow = 2.90 fps
V_2 = Outgoing Flow = 1.86 fps
Use higher velocity,V_2 , and from Plate 17, Curve "C", "h_A" = 0.05
h_A = 0.05

Velocity Head Loss - "B"

`

Use curve "B" from Plate 17, to determine hv
Since V_2 is larger than $_{V1}$, then h_B = 0
h_B = 0

Directional Change Loss - "C"

Use higher velocity,V_2 , and from Plate 17, Curve "C", "h" = 0.05
for 90 change in flow direction, h_C=2h=h_C =0.1

Loss Due to Incoming Volume - "D"

h_D = 0 there is no branch flow

TOTAL LOSS = A+B+C+D= 0.15 ft

SDMH # 3:

Entrance and Exit Loss - "A"

V_1 = Incoming Flow = 6.43 fps
V_2 = Incoming Flow = 1.86 fps
V_3 = Incoming Flow = 3.01 fps
V_4 = Outgoing Flow = 17.56 fps
Use higher velocity,V_4 , and from Plate 17, Curve "C", "h_A" = 1.7
h_A = 1.7

Velocity Head Loss - "B"

`

Use curve "B" from Plate 17, to determine h_v

Since V_4 is greater than V_1, then $h_B = h_{B4} - h_{B1}$
$h_{B1} =$ 0.64
$h_{B4} =$ 3.4 Max from "B" Plate 17
$h_B =$ 2.76

Directional Change Loss - "C"

Use higher velocity,V_4 , and from Plate 17, Curve "C", "h" = 1.6
for more than 90 change in flow direction, h_C=0.67h
$h_C =$ 1.072

Loss Due to Incoming Volume - "D"

Total Branch Volume = 9.71 cfs
Ratio of Branch to Upstream = 0.21378247
From Plate 18, using this flow ratio and higher velocity, h_D =0.7
$h_D =$ 0.7

TOTAL LOSS = 6.232 ft

<u>SDMH/DRYWELL # 1:</u>

Entrance and Exit Loss - "A"

V_1 = Incoming Flow = 17.56 fps
V_2 = Outgoing Flow = 7.80 fps
Use higher velocity,V_2 , and from Plate 17, Curve "C", "h_A" = 1.15
$h_A =$ 1.15

Velocity Head Loss - "B"

`

Use curve "B" from Plate 17, to determine h_v
Since V2 is less than to V1, then hB shall be zero
hB1 = 0.12
hB = 0

Directional Change Loss - "C"

Use higher velocity,V2 , and from Plate 17, Curve "C", "h" = 1.15
for 90 change in flow direction, h_C=2h=
$h_C =$ 2.3

Loss Due to Incoming Volume - "D"
$h_D =$ 0 there is no branch flow

TOTAL LOSS = A+B+C+D= 3.45 ft

<u>HGL Calculations:</u>

Controlling Grade at Ocean Outlet is 6.2 ft
Water depth 2.43
HGL at Outlet 8.63
Head Loss in 36 inch line, SDL # 5, HL = Slope*L = 2.4408
the Downstream HGL at SDMH/Drywell # 1 == 10.92 O.K.
the Upstream HGL at SDMH/Drywell # 1 = 14.37 O.K.
Head Loss in 24 inch line, SDL # 4, HL = Slope*L = 9.8521
the Downstream HGL at SDMH # 3 = 20.46 O.K.
the Upstream HGL at SDMH # 3 = 26.68 O.K.
Head Loss in 36 inch line, SDL # 2, HL = Slope*L = 3.8
the Downstream HGL at SDMH # 1 = 24.19 O.K.
the Upstream HGL at SDMH # 1 = 24.55 O.K.
Head Loss in 36 inch line, SDL # 1, HL = Slope*L = 1.9734
the Downstream HGL at Intake # 1 =26.08 O.K.
the Upstream HGL at Intake# 1 = 28.08 O.K.
Head Loss in 30-inch line, SDL # 3, HL = Slope*L = 10.2307
the Downstream HGL at SDMH # 2 = 35.24 O.K.
the Upstream HGL at SDMH # 2 = 35.39 O.K.
Head Loss in 6-inch line, SDL # 6 = HL = Slope*L = 5.2185
HGL at Drain Intel # 1 = 13.00 > 12.1 Floods the area
Head Loss in 6-inch line, SDL # 8, HL = Slope*L = 4.0067
HGL at Drain Intel # 2 = 28.75 O.K.

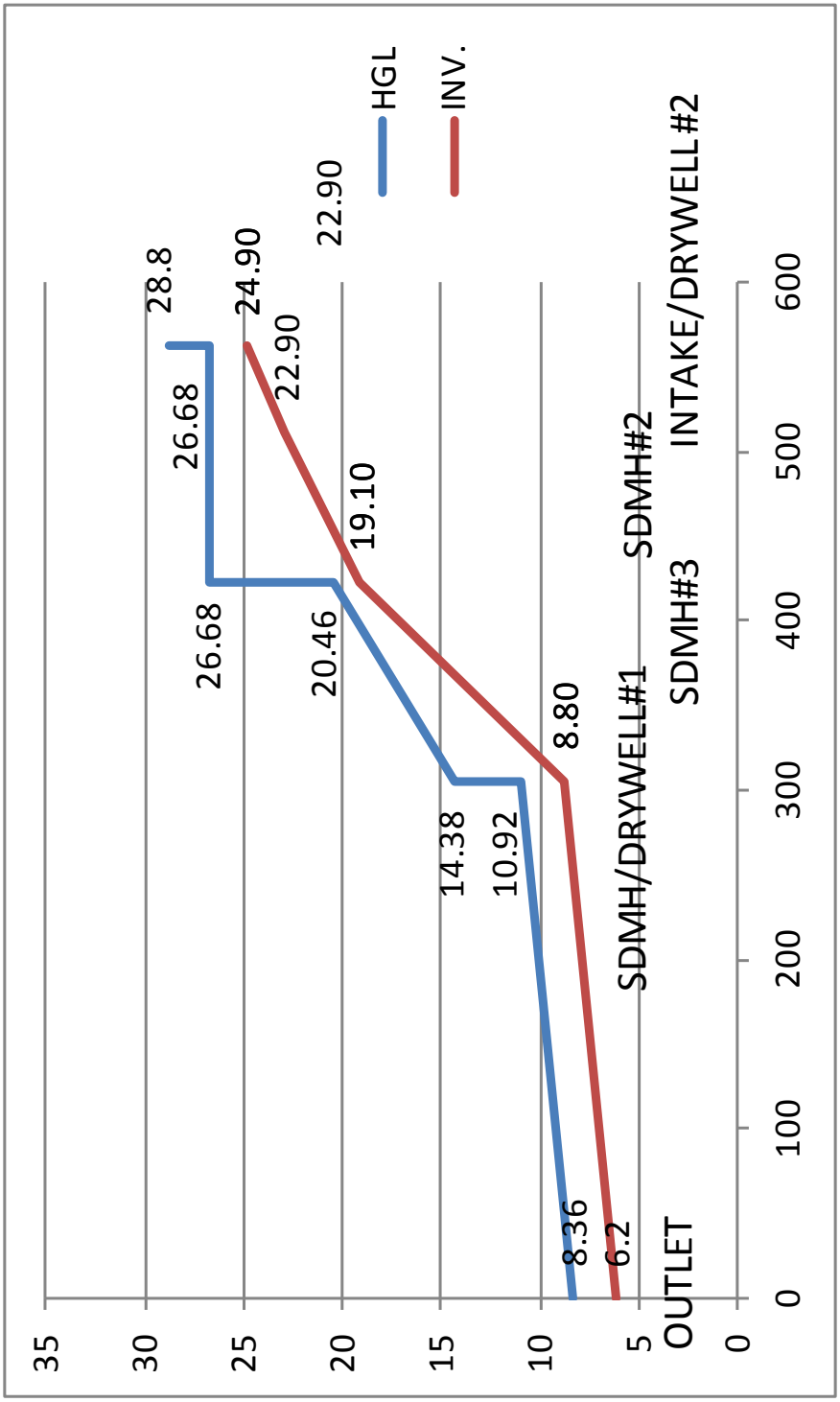

HGL BETWEEN OUTLET AND INTAKE/DRYWELL #2

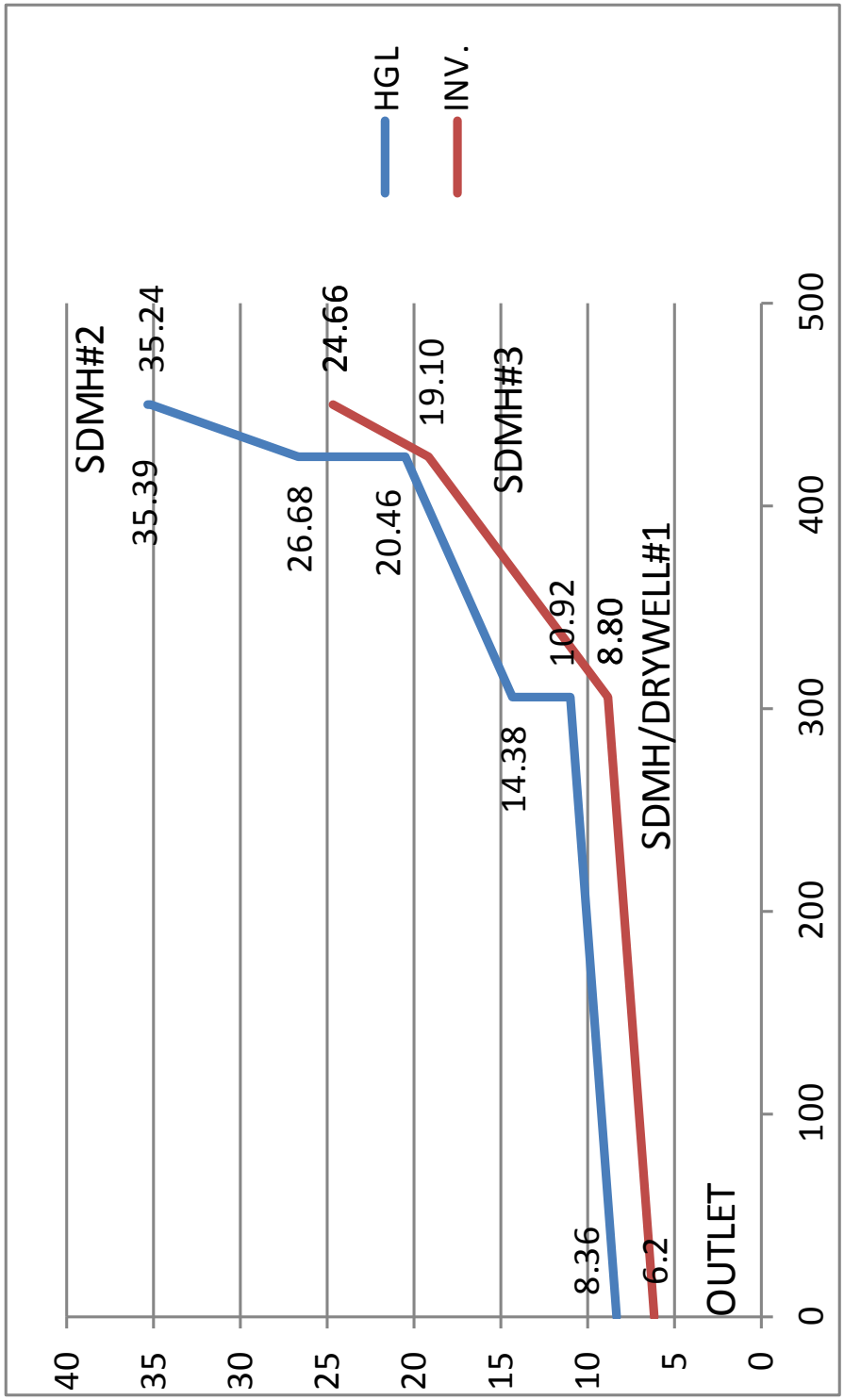

HGL BETWEEN OUTLET AND STORM DRAIN MANHOLE #2

HGL BETWEEN OUTLET AND INLET #2

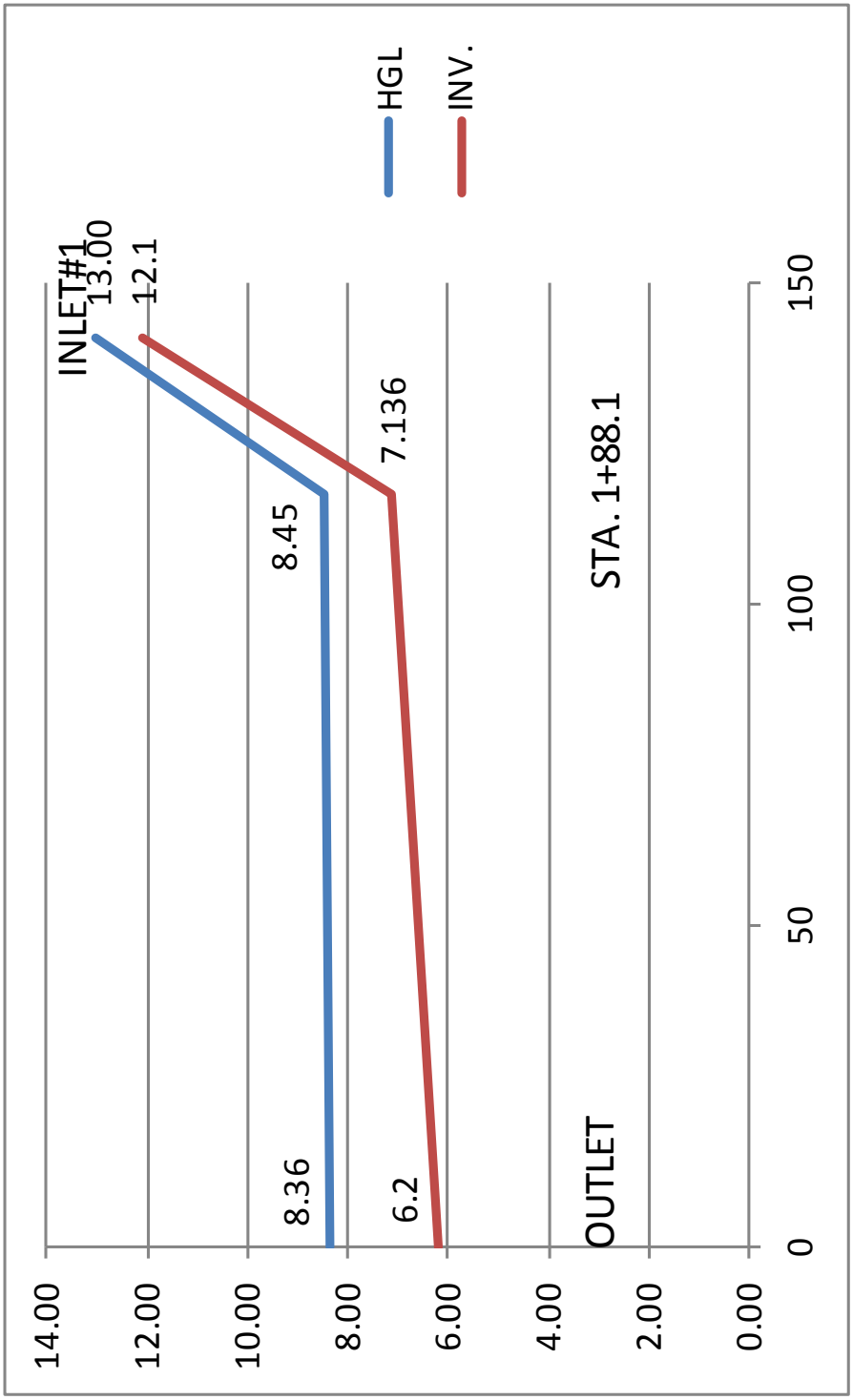

HGL BETWEEN OUTLET AND INLET # 1

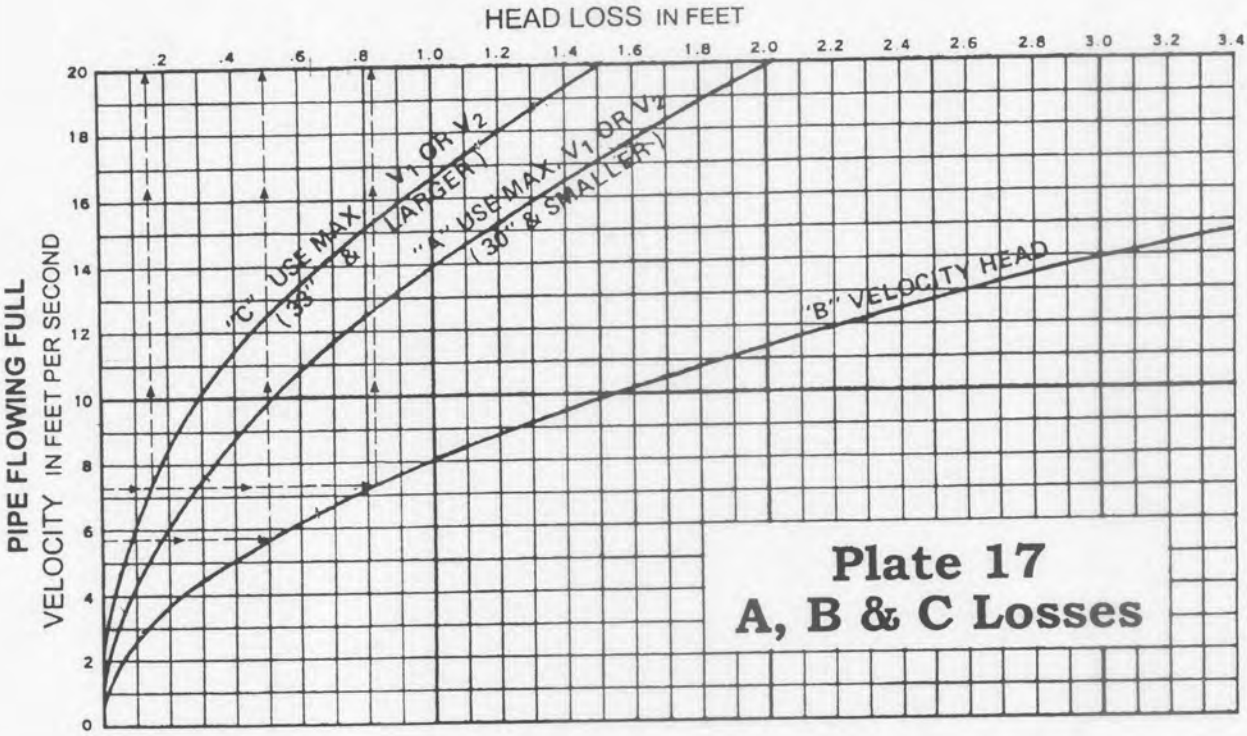

Head Losses in Manholes

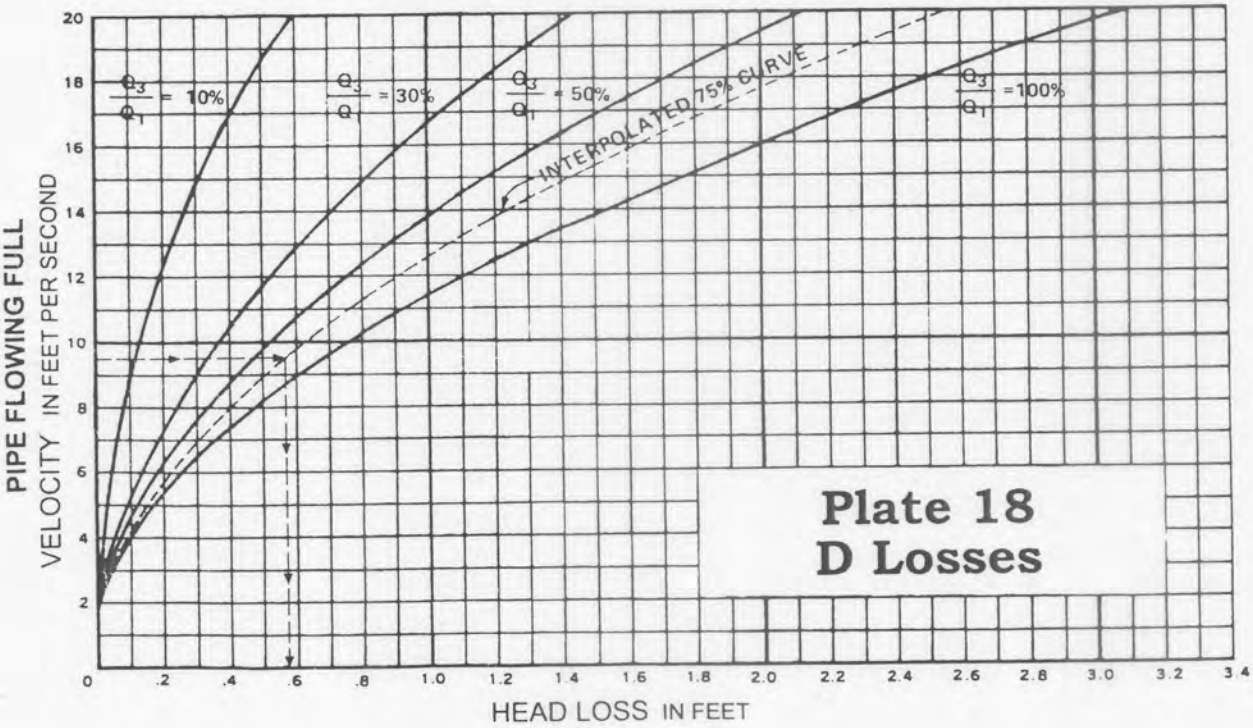

SOURCE: BALTIMORE COUNTY DEPARTMENT OF PUBLIC WORKS

Marc M. Siah & Associates, Inc.

Consulting Civil • Structural • Environmental & Ocean Engineers
820 South Beretania Street, Suite 201, Honolulu, Hawaii 96813

APPENDIX L

Draft Environmental Assessment Comments & Responses

Date	Agency	Response	Level
11/1/2012	DEM	1/9/2013	1 County
10/8/2012	DHHC	1/9/2013	
11/19/2012	DPW	1/31/2013	
4/3/2013	DPW		
11/7/2012	DWS	1/9/2013	
10/26/2012	Fire	1/9/2013	
10/2/2012	MDOT	1/9/2013	
3/9/2013	Planning	5/21/2013	
10/19/2012	Police	1/9/2013	
10/2/2012	DAGS	1/9/2013	2 State
10/23/2012	DBET - Planning	1/9/2013	
10/22/2012	DHHL	1/9/2013	
10/5/2012	DHS	1/9/2013	
10/22/2012	DLNR-Aquatics	1/9/2013	
10/10/2012	DLNR-BOR	1/9/2013	
10/16/2012	DLNR-Eng	1/9/2013	
11/2/2012	DLNR-OCCL	1/31/2013	
10/17/2012	DOH-CWB	1/9/2013	
10/22/2012	DOH-Maui	1/9/2013	
10/30/2012	State Civil Defense	1/9/2013	
11/9/2012	State DOT	1/9/2013	
1/29/2013	USACE	2/7/2013	3 Federal
10/9/2012	MECo	1/9/2013	4 Other
3/8/2013	Harry Duckworth etal.	3/21/2013	

CHRIS HART
& PARTNERS, INC.
Landscape Architecture
City & Regional Planning

January 9, 2013

Mr. Michael M. Miyamoto, Deputy Director
Department of Environmental Management
2200 Main Street, Suite 100
Wailuku, Hawaii 96793

Dear Mr. Miyamoto:

Re: **Draft Environmental Assessment** for the Proposed Kahana Sunset Shoreline and Site Improvements at TMK: (2) 4-3-003:015 Lahaina, Maui, Hawaii. (EA 2012-0002), (SM1 2012-0003), (SSV 2012-0002), (CPA 2012-0003), (CIZ 2012-0007)

Thank you for your November 1, 2012 response to the Draft Environmental Assessment (EA) for the subject project.

The Final EA will note that any demolition waste will be disposed at the Maui Demolition and Construction Landfill at Maalaea.

If you have any further questions, please contact Mr. Raymond Cabebe, Associate Land Planner, of our office, or me.

Sincerely,

Jordan E. Hart
President
Principal Land Planner

JEH:rrc
attachment

c: Ms. Jacqueline Scheibel
Mr. Keith Meyer
Ms. Karen Dedman
Ms. Karen Krenz

115 N. Market Street, Wailuku, Maui, Hawaii 96793-1717 • Ph 808-242-1955 • Fax 808-242-1956
www.chpmaui.com

AGENCY TRANSMITTAL RESPONSE e-FORM

FOR DEPARTMENT OF PLANNING, COUNTY OF MAUI

October 10, 2012

AGENCY NAME	Department of Environmental Mgmt.	PHONE	270-8230
PROJECT: APPLICANT: PERMIT NO: TMK: STREET ADDRESS: PROJECT DESCRIPTION: SECURITY CODE:	Kahana Sunset Shoreline and Site Improvements Kahana Sunset AOAO EA 2012/0002,SM1 2012/0003, SSV 2012/0002, CPA 2012/0003, CIZ 2012-0007 2-4-3-003-015 4909 Lower Honoapiilani Road, Lahaina, Maui, Hawaii Enhance public safety, create long-term solution to stabilize the bank at the shoreline of Keonenui Bay to prevent future erosion and potential undermining of neighboring shoreline protection structures; prevent earthen soils from erodingand causing siltation of coastal waters. Portions of the existing seawall and entire stair structure will be demolished. A new replacement retaining wall with steps to the beach is proposed to be constructed mauka of the proposed certified shoreline		

☐ COMMENTS/RECOMMENDATIONS ☒ NO COMMENTS

WASTEWATER RECLAMATION DIVISION COMMENTS

☒ COMMENTS/RECOMMENDATIONS ☐ NO COMMENTS

SOLID WASTE DIVISION COMMENTS

Demolition waste should be disposed at the Maui Demolition and Construction Landfill in Maalaea.

CHRIS HART
& PARTNERS, INC.
Landscape Architecture
City & Regional Planning

January 9, 2013

Mr. Wade Oshiro, Housing Administrator
Department of Housing and Human Concerns
200 South High Street
Wailuku, HI 96793

Dear Mr. Oshiro:

Re: **Draft Environmental Assessment** for the Proposed Kahana Sunset Shoreline and Site Improvements at TMK: (2) 4-3-003:015 Lahaina, Maui, Hawaii. (EA 2012-0002), (SM1 2012-0003), (SSV 2012-0002), (CPA 2012-0003), (CIZ 2012-0007)

Thank you for your October 8, 2012 memorandum in response to the Draft Environmental Assessment (EA) for the subject project. The applicant acknowledges your determination that Chapter 2.98, Maui County Code, is not applicable to the subject project.

If you have any further questions, please contact Raymond Cabebe of our office, or me.

Sincerely,

Jordan E. Hart
President
Principal Land Planner

JEH:rrc
attachment

c: Ms. Jacqueline Scheibel
Mr. Keith Meyer
Ms. Karen Dedman
Ms. Karen Krenz

115 N. Market Street, Wailuku, Maui, Hawaii 96793-1717 • Ph 808-242-1955 • Fax 808-242-1956
www.chpmaui.com

DEPARTMENT OF
HOUSING AND HUMAN CONCERNS
COUNTY OF MAUI

ALAN M. ARAKAWA
Mayor

JO-ANN T. RIDAO
Director

JAN SHISHIDO
Deputy Director

200 SOUTH HIGH STREET • WAILUKU, HAWAII 96793 • PHONE (808) 270-7805 • FAX 270-7165 • EMAIL director.hhc@mauicounty.gov

DEPT. OF LAW
COUNTY OF MAUI
RECEIVED
'12 OCT 10 P3:19

Date: October 8, 2012

To: **Clayton I. Yoshida** Planning Program Administrator, Dept. of Planning

From: Wayde Oshiro, Housing Administrator Housing and Human Concerns

Subject: **Preliminary Planning Review**
Applicability to Residential Workforce Housing Policy
Chapter 2.96, MCC; effective 12/5/2006

Project Name: **Kahana Sunset Shoreline and Site Improvements**
Applicant: **Kahana Sunset AOAO**
Subject I.D.: **EA 2012/0002, SM1 2012/0003, SSV 2012/0002, CPA 2012/0003.**
TMK: **(2) 4-3-003:015**
Street Address: **4909 Lower Honoapiilani Road, Lahaina, Maui, Hawaii**
Determination:

☑ **Not-Applicable**
Does not meet applicability as set forth in 2.96.030(A), MCC

☐ **Applicable**
☐ **No Exemptions**

☐ **Exemptions: (2.96.030)**

☐1. An executed affordable housing agreement, currently in effect and approved prior to the effective date of chapter.

☐2. A development subject to a change in zoning condition that requires affordable or residential workforce housing.

☐3. A subdivision granted preliminary subdivision approval prior to the effective date of this chapter. (12/5/2006)

☐4. A building permit application submitted prior to the effective date of this chapter.

☐5. A family subdivision, for immediate family members, as described in sections 18.20.280(B)(1) and (B)(2) of this code.

☐6. A development by a government entity, 201H, community land trust, or an affordable housing project with more than the residential workforce housing units, in-lieu fees, or in-lieu land required by section 2.96.040, as approved by the director.

'12 OCT 10 P3:18

Additional Comments: ☐ **See comments below** ☐ **See Attachment(s)**
☑ **We have NO comment**

Reviewed By: Wayde T. Oshiro
Wayde T. Oshiro

10/08/2012
Date

ALAN M. ARAKAWA
Mayor

DAVID C. GOODE
Director

ROWENA M. DAGDAG-ANDAYA
Deputy Director

Telephone: (808) 270-7845
Fax: (808) 270-7955

COUNTY OF MAUI
DEPARTMENT OF PUBLIC WORKS
200 SOUTH HIGH STREET, ROOM NO. 434
WAILUKU, MAUI, HAWAII 96793

GLEN A. UENO, P.E., Interim
Development Services Administration

CARY YAMASHITA, P.E.
Engineering Division

BRIAN HASHIRO, P.E.
Highways Division

RECEIVED
APR 04 2013
CHRIS HART & PARTNERS, INC.
Landscape Architecture and Planning
cc: Raymond 09/143

April 3, 2013

Mr. Jordan E. Hart, President
Chris Hart & Partners, Inc.
115 North Market Street
Wailuku, Maui, Hawaii 96793

Dear Mr. Hart:

SUBJECT: HAWAII REVISED STATUTES, CHAPTER 343 ENVIRONMENTAL ASSESSMENT IN SUPPORT OF APPLICATIONS FOR SPECIAL MANAGEMENT AREA USE PERMIT, SHORELINE SETBACK VARIANCE, COMMUNITY PLAN AMENDMENT AND CHANGE IN ZONING FOR KAHANA SUNSET SHORELINE AND SITE IMPROVEMENTS; TMK: (2) 4-3-003:015, LAHAINA, MAUI, HAWAII EA 2012/0002, SM1 2012/0003, SSV 2012/0002, CPA 2012/0003, CIZ 2012/0007

Thank you for meeting with my staff on January 15, 2013, and for your follow-up letter dated January 31, 2013.

We acknowledge that the temporary mitigation measures involving the use of a sand bag barricade or an intercepting ditch in the Preliminary Drainage Report and on Page 26 of the Draft Environmental Assessment are not included in the project scope. These measures are for consideration purposes only.

We have no additional comments regarding the subject Draft Environmental Assessment.

Very truly yours,

ROWENA M. DAGDAG-ANDAYA
Deputy Director of Public Works

RMDA:jso
s:\rowena\jordan hart_kahana sunset shoreline and site improvements

CHRIS HART
& PARTNERS, INC.
Landscape Architecture
City & Regional Planning

January 31, 2013

Mr. David C. Goode, Director
Department of Public Works
250 South High Street
Wailuku, HI 96793

Attention: Ms. Rowena M. Dagdag-Andaya

Dear Mr. Goode:

RE: **Draft Environmental Assessment** for the Proposed Kahana Sunset Shoreline and Site Improvements at TMK: (2) 4-3-003:015 Lahaina, Maui, Hawaii. (EA 2012-0002)(SM1 2012-0003)(SSV 2012-0002)(CPA 2012-0003)(CIZ 2012-0007)

Thank you for your November 19, 2012 memorandum and for allowing your staff to meet with us on January 15, 2013 in response to the Draft Environmental Assessment (EA) for the subject project. We offer the following responses to your comments as enumerated in your memorandum:

1. The "Hayashi Seawall" concept was explored, however the coastal, civil and structural engineers concluded that this particular design would not be appropriate for this project due to existing structures and infrastructure, and the proximity to the shoreline and ocean.

2. through 6. We acknowledge your comments on storm water runoff on, and along Lower Honoapiilani Road and your concerns regarding the redirection of runoff. As discussed during our meeting, temporary mitigation measures suggested in the Preliminary Drainage Report are for Kahana Sunset's consideration purposes only, and are **not** included in project scope, which is specifically outlined in the application report, **Section I.F.** "Description of Proposed Action (Preferred Alternative)".

115 N. Market Street, Wailuku, Maui, Hawaii 96793-1717 • Ph 808-242-1955 • Fax 808-242-1956
www.chpmaui.com

The only drainage improvements proposed, as part of the above referenced applications, are to portions of the existing **onsite** system downstream of Drywell No. 1, as referenced in **Section I.F.** "Description of Proposed Action (Preferred Alternative)".

Proposed drainage improvements outlined in the project's "Preferred Alternative" are as follows:

> ***Drainline.*** *The existing approximately 300-foot long 36-inch corrugated metal drainline, identified as Existing Storm Drainline (ESD) No. 5, running from a drywell at the top of the courtyard to the existing seawall near Building "A" is proposed to be replaced due to its age (**See**: Figure No. 11) . The outlet at the seawall may be shifted approximately 5 feet north, towards Building "A" and approximately 3 feet to the east (landward). Other drainage improvements include:*
>
> - *Upsize ESD No. 6 (approximately 70 feet) and Inlet No. 1.*
> - *Replace Open Channel No. 2 with an inlet and subsurface drainline to ESD No. 5.*
> - *Retrofit and install filters on Inlet Nos. 1 & 2 to capture sediments, debris, and other pollutants.*

In conclusion, as discussed during our meeting, we respectfully request comment on the scope of drainage improvements as proposed in the above referenced application report, specifically those drainage improvements outlined in **Section I.F.** "Description of Proposed Action (Preferred Alternative)".

If you have any further questions, please contact Raymond Cabebe of our office, or me.

Sincerely,

2013-01-31

Jordan E. Hart
President
Land Planner

JEH:rrc
attachment
c: Ms. Jacqueline Scheibel
Mr. Keith Meyer
Ms. Karen Dedman
Ms. Karen Krenz

12 NOV 21 A9:53

ALAN M. ARAKAWA
Mayor

DAVID C. GOODE
Director

ROWENA M. DAGDAG-ANDAYA
Deputy Director

Telephone: (808) 270-7845
Fax: (808) 270-7955

DEPT OF PLANNING
COUNTY OF MAUI
RECEIVED

RALPH NAGAMINE, L.S., P.E.
Development Services Administration

CARY YAMASHITA, P.E.
Engineering Division

BRIAN HASHIRO, P.E.
Highways Division

COUNTY OF MAUI
DEPARTMENT OF PUBLIC WORKS
200 SOUTH HIGH STREET, ROOM NO. 434
WAILUKU, MAUI, HAWAII 96793

November 19, 2012

MEMO TO: WILLIAM R. SPENCE, PLANNING DIRECTOR

FROM: DAVID C. GOODE, DIRECTOR OF PUBLIC WORKS

SUBJECT: **HAWAII REVISED STATUTES, CHAPTER 343 ENVIRONMENTAL ASSESSMENT IN SUPPORT OF APPLICATIONS FOR SPECIAL MANAGEMENT AREA USE PERMIT, SHORELINE SETBACK VARIANCE, COMMUNITY PLAN AMENDMENT AND CHANGE IN ZONING FOR KAHANA SUNSET SHORELINE AND SITE IMPROVEMENTS; TMK: (2) 4-3-003:015**
EA 2012/0002, SM1 2012/0003, SSV 2012/0002, CPA 2012/0003, CIZ 2012/0007

We reviewed the subject application and have the following comments:

Comments from the Highways Division:

1. The Department encourages the applicant to explore the design of the "Hayashi Seawall" where the slope of the hardened surface follows the natural slope of sandy beaches, limiting vertical retaining walls to as far inland and away from the shoreline as possible.

2. The drainage consultant makes the following statement: "Since the existing storm drain inlets in Lower Honoapiilani Road right-of-way are not well maintained and in poor conditions, not all runoff generated on the roadway is collected and conveyed into the system." Figure 2-3 of the Preliminary Drainage Report for Kahana Sunset shows the existing drainage site plan. Of the two existing storm drains on Lower Honoapiilani Road, one serves the Kahana Villas detention basin. This storm drain does not have an inlet on Lower Honoapiilani Road. The other inlet is on the mauka shoulder

of Lower Honoapiilani Road in an area where storm water flow is not at the low point of Lower Honoapiilani Road at Kahana Sunset. Flood waters that are captured by the drainage inlet flows to the low point and into Kahana Sunset property.

3. The consultant makes the following recommendation on the drainage situation on Lower Honoapiilani Road: Barricading the length of property line along the roadway with sand bags or installing a new intercepting ditch along the roadway shoulder parallel to the property line, are two temporary schemes for protecting the development from localized erosion due to unimpeded stray overland flow of roadway storm runoff into the property.

4. Should a sand bag barricade be placed along the Kahana Sunset property line, drainage runoff would have no where to go, except to pond at the low point of Lower Honoapiilani Road in front of the Kahana Sunset property. If the pond of water is breached, it could send a large volume of water into the Kahana Sunset property, causing more damage than the normal overland flows.

5. Installing an intercepting ditch would necessitate having somewhere for the ditch to empty in to. The ditch would aggregate the overland flow into a bigger flow. This ditch water would need to enter the Kahana Sunset property as the Kahana Sunset property is lower than property that surrounds them.

6. While the overland sheet flow of water from the road may be unwelcome by the Kahana Sunset, the alternatives they propose may be detrimental for the condominium facility.

If you have any questions regarding this memorandum, please call Rowena M. Dagdag-Andaya at 270-7845.

DCG:RMDA:ls
xc: Highways Division
Engineering Division
S:\LUCA\CZM\kahana_sunset_shoreline_site_improv_ea_sm1_ssv_cpa_ciz_430030015_ls.wpd

CHRIS HART
& PARTNERS, INC.
Landscape Architecture
City & Regional Planning

January 9, 2013

Mr. David Taylor, Director
Department of Water Supply
200 South High Street
Wailuku, HI 96793

Attention: Ms. Marti Buckner

Dear Mr. Taylor:

Re: **Draft Environmental Assessment** for the Proposed Kahana Sunset Shoreline and Site Improvements at TMK: (2) 4-3-003:015 Lahaina, Maui, Hawaii. (EA 2012-0002), (SM1 2012-0003), (SSV 2012-0002), (CPA 2012-0003), (CIZ 2012-0007)

Thank you for your November 7, 2012 letter in response to the Draft Environmental Assessment (EA) for the subject project.

The Final EA will note your suggestion to schedule irrigation between 7 PM and 10 AM after new plantings are established. The Best Management Practices (BMP) recommended to address pollution prevention will be implemented and incorporated in the Final EA.

If you have any further questions, please contact Raymond Cabebe of our office, or me.

Sincerely,

Jordan E. Hart
President
Principal Land Planner

JEH:rrc
attachment
c: Ms. Jacqueline Scheibel
Mr. Keith Meyer
Ms. Karen Dedman
Ms. Karen Krenz

115 N. Market Street, Wailuku, Maui, Hawaii 96793-1717 • Ph 808-242-1955 • Fax 808-242-1956
www.chpmaui.com

ALAN M. ARAKAWA
Mayor

DAVID TAYLOR, P.E.
Director

PAUL J. MEYER
Deputy Director

DEPARTMENT OF WATER SUPPLY
COUNTY OF MAUI
200 SOUTH HIGH STREET
WAILUKU, MAUI, HAWAII 96793-2155
www.mauiwater.org

'12 NOV 16 A7:38

November 7, 2012
Mr. James Buika, Staff Planner
Department of Planning
County of Maui
250 South High Street
Wailuku HI 96793

Re: I.D.: EA 2012/0002; SM 1 2012/0003; SSV 2012/0002; CPA 2012/0003; CIZ 2012/0007
TMK: (2) 4-3-003:015
Project Name: Kahana Sunset Shoreline & Site Improvements

Dear Mr. Buika:

Thank you for the opportunity to comment on these applications.

Source Availability System Infrastructure and Consumption
The project area is served by the Lahaina system.An eight inch waterline runs across the street parallel to a twelve-inch waterline bordering the property along Lower Honoapiilani Road. Fire protection is provided by two DWS fire hydrants adjoining the parcel. The parcel is served by a 1-1/2 inch water meter. Average consumption in 2011 for this property was approximately 20,231 gallons per day. The project is not anticipated to generate additional demand on the DWS system.

Conservation
We are pleased to note that the document states that drought tolerant Hawaii native trees, shrubs and groundcover will be used wherever possible and the plants will be watered using an automatic irrigation controller with rain-sensors.
We suggest that all irrigation be scheduled between 7 PM and 10 AM, no more than 2 days per week once plants are established.

Pollution Prevention
In order to protect ground and surface water sources, Best Management Practices (BMPs) designed to minimize infiltration and runoff from construction should be implemented during construction. In addition to the required BMPs, the mitigation measures below should be included in the final EA:

- Prevent cement products, oil, fuel and other toxic substances from falling or leaching into the ground.
- Maintain vehicles and equipment to prevent oil or other fluids from leaking.

•Concrete trucks and tools used for construction should be rinsed off-site.
•Staging and storage of construction machinery and storage of debris should not take place on any sandy beach area.
•Properly and promptly dispose of all loosened and excavated soil and debris material from drainage structure work.
•Properly install and maintain erosion control barriers such as silt fencing.
•Disturb the smallest area possible.
•Retain ground cover until the last possible date.
•Stabilize denuded areas by sodding or planting as soon as possible.
•Keep run-off on site.
•No construction or toxic materials or debris should be placed where it may enter the ocean.
•Construction debris and sediment should be removed from construction areas each day that construction occurs to prevent the accumulation of sediment and other debris which may be discharged into coastal waters. Debris should be disposed of outside the coastal zone.

Should you have any questions, please contact Staff Planner Marti Buckner at our Water Resources and Planning Division at 463-3104, or at marti.buckner@mauicounty.gov.

Sincerely,

Dave Taylor, P.E., Director
mlb

cc: engineering division

CHRIS HART
& PARTNERS, INC.
Landscape Architecture
City & Regional Planning

January 9, 2013

Captain Paul Haake
Department of Fire and Public Safety
313 Manea Place
Wailuku, HI 96793

Dear Capt. Haake:

Re: **Draft Environmental Assessment** for the Proposed Kahana Sunset Shoreline and Site Improvements at TMK: (2) 4-3-003:015 Lahaina, Maui, Hawaii. (EA 2012-0002), (SM1 2012-0003), (SSV 2012-0002), (CPA 2012-0003), (CIZ 2012-0007)

Thank you for your October 26, 2012 email in response to the Draft Environmental Assessment (EA) for the subject project. We acknowledge that your department has no specific comments or objections in regards to the subject project.

If you have any further questions, please contact Raymond Cabebe of our office, or me.

Sincerely,

Jordan E. Hart
President
Principal Land Planner

JEH:rrc
attachment

c: Ms. Jacqueline Scheibel
Mr. Keith Meyer
Ms. Karen Dedman
Ms. Karen Krenz

115 N. Market Street, Wailuku, Maui, Hawaii 96793-1717 • Ph 808-242-1955 • Fax 808-242-1956
www.chpmaui.com

Clayton Yoshida - Kahana Sunset Shoreline and Site Improvements

From: Paul Haake
To: Clayton Yoshida
Date: 10/26/2012 2:29 PM
Subject: Kahana Sunset Shoreline and Site Improvements

DEPT OF PLANNING
COUNTY OF MAUI
RECEIVED
'12 OCT 26 P2:44

Hi Clayton,

Our department provides the following response for this request.

Thanks.

****

October 26, 2012

Clayton I. Yoshida
Planning Program Administrator
Department of Planning
County of Maui

Re: Kahana Sunset Shoreline and Site Improvements
EA 2012/0002; SM1 2012/0003; SSV 2012/0002; CPA 2012/0003;
CIZ 2012/0007
4909 Lower Honoapiilani Road, Lahaina, Maui, HI
TMK: (2) 4-3-003: 015

Dear Clayton:

Thank for the allowing the Department of Fire and Public Safety the opportunity to comment on the above subject. At this time, our office has no specific comments or objections in regards to this subject.

If there are any questions or comments, please feel free to contact me at 244-9161 ext. 23. Thank you for your attention to fire prevention and public safety.

Sincerely,
Paul Haake
Captain, Fire Prevention Bureau
Dept. of Fire & Public Safety
Maui County

313 Manea Place Wailuku, HI 96793
244-9161 ext. 23
244-1363 fax

CHRIS HART
& PARTNERS, INC.
Landscape Architecture
City & Regional Planning

January 9, 2013

Mr. Jim Oster
Department of Transportation
2145 Kaohu Street Ste. 102
Wailuku, HI 96793

Dear Mr. Oster:

Re: **Draft Environmental Assessment** for the Proposed Kahana Sunset Shoreline and Site Improvements at TMK: (2) 4-3-003:015 Lahaina, Maui, Hawaii. (EA 2012-0002), (SM1 2012-0003), (SSV 2012-0002), (CPA 2012-0003), (CIZ 2012-0007)

Thank you for your October 2, 2012 No Comment response to the Draft Environmental Assessment (EA) for the subject project.

If you have any further questions, please contact Raymond Cabebe of our office, or me.

Sincerely,

Jordan E. Hart
President
Principal Land Planner

JEH:rrc
attachment

c: Ms. Jacqueline Scheibel
Mr. Keith Meyer
Ms. Karen Dedman
Ms. Karen Krenz

115 N. Market Street, Wailuku, Maui, Hawaii 96793-1717 • Ph 808-242-1955 • Fax 808-242-1956
www.chpmaui.com

AGENCY NAME	Dept. of Transportation	PHONE	

Agency Transmittal – (EA 2012/0002, SM1 2012/0003, SSV 2012/0002, CPA 2012/0003, CIZ 2012/0007)
September 27, 2012 (County of Maui)
Page 3

COMMENT/RECOMMENDATION BOX			
'12 OCT -3 A9:23			
Signed:		Dated:	
Print Name:		Title:	
NO COMMENT			
Signed:	Jim Oster	Dated:	10-2-12
Print Name:	JIM OSTER	Title:	ENGINEER

CHRIS HART & PARTNERS, INC.
Landscape Architecture
City & Regional Planning

DEPT OF PLANNING
COUNTY OF MAUI
RECEIVED

'13 MAY 21 A11:10

May 20, 2013

Mr. William Spence, Director
Planning Department
250 South High Street
Wailuku, Hawaii 96793

Attention: Mr. James Buika

Dear Mr. Spence:

RE: Draft Environmental Assessment in support of Applications for Special Management Area (SMA) Use Permit, Shoreline Setback Variance (SSV), Community Plan Amendment (CPA) and Change in Zoning (CIZ) for the Kahana Sunset Shoreline and Site Improvements at TMK: (2) 4-3-003:015 Alaeloa, Lahaina, Maui, Hawaii.

Thank you for your March 25, 2013 letter on the Draft Environmental Assessment (EA) for subject project. We offer the following responses to the items as enumerated in your letter:

1. Kahana Sunset will invite property owners within 500 feet to an on-site meeting to share the project plans and answer questions. Kahana Sunset will provide information on the drainage improvements, the relocation of the seawall, the beach access path, and the change in zoning from residential to hotel.
2. Kahana Sunset appreciates the Department's acknowledgment of the effort that has gone into the proposed establishment of a public beach access along Kahana Sunset's south property line. It is our expectation that the neighboring property owner will not be supportive of the access path and, that the legality of the neighbor's stairs is questionable. As such, Kahana Sunset would like to pursue designing and constructing its own direct path to the beach. It is our expectation that this would expedite the completion of the process and simplify any future repair and maintenance issues.
3. The project's civil and coastal engineer, Dr. Marc Siah, will be providing a thorough analysis of alternative design configurations. Please note, during the analysis and design phase of the project it was determined by both the soils and structural engineers that the undermining of the existing seawall was due to its structural design and not the wall's convex configuration. As noted by structural

115 N. Market Street, Wailuku, Maui, Hawaii 96793-1717 • Ph 808-242-1055 • fax 808-242-1956
www.chpmaui.com

engineer Dr. Kiumars Siah, the existing seawall is a "gravity wall without a footing" which eventually led to its failure (Maui Planning Commission, February 26, 2013). According to soils engineer Paul Weidig, "the concrete and stones placed in the cavities beneath the walls had been founded on sand that was undermined by sea wave action" causing the sinkholes behind the wall (*Geoanalytical Report*, Weidig, March 2006, p. 3). Therefore, it is anticipated that Dr, Siah's analysis will indicate that failure of the existing wall has less to do with its configuration and more to do with its structural design.

If you have any further questions, please call Raymond Cabebe of our office, or me.

Sincerely,

Jordan E. Hart
President
Land Planner

Enclosures
c: Mr. Keith Meyer
Ms. Jacqueline Scheibel
Ms. Karen Dedman
Ms. Karen Krenz
Mr. Ken Gadicke

ALAN M. ARAKAWA
Mayor

WILLIAM R. SPENCE
Director

MICHELE CHOUTEAU McLEAN
Deputy Director

COUNTY OF MAUI

DEPARTMENT OF PLANNING

March 25, 2013

Mr. Raymond Cabebe
Chris Hart & Partners, Inc.
115 North Market Street
Wailuku, Hawaii 96793

Dear Mr. Cabebe:

SUBJECT: COMMENTS FROM THE COUNTY OF MAUI DEPARTMENT OF PLANNING (DEPARTMENT) ON THE DRAFT ENVIRONMENTAL ASSESSMENT (EA) PREPARED IN SUPPORT OF THE PROPOSED KAHANA SUNSET AOAO SHORELINE AND SITE IMPROVEMENTS, AT 4909 LOWER HONOAPIILANI ROAD, LAHAINA, MAUI, HAWAII; TMK: (2) 4-3-003:015 (CPA 2012/0003) (CIZ 2012/0007) (SM1 2012/0003) (SSV 2012/0002) (EA 2012/0002)

The Department has reviewed the Draft EA, dated "July, 2012" for the above-referenced project. Please address the following comments and include the necessary information in the Final EA on the following questions and topics:

1. As part of the Final EA process, the Department encourages the Applicant to conduct a public meeting with the neighboring properties in order to understand concerns from their neighbors regarding the: a) proposed improvements to the property; b) issues related to limited public beach access; c) issues related to the potential Change in Zoning (CIZ); d) issues related to drainage; and e) any other related issues. In addition, a public meeting will allow the Applicant to communicate to its neighbors findings from the Preliminary Drainage Report for Kahana Sunset (PDR), dated April 2012, and included as Appendix K of the Draft EA.

   - The Department and the County of Maui Department of Public Works (DPW) acknowledge the findings in the PDR. The PDR for Kahana Sunset estimates that the Kahana Sunset drainage system that terminates at the ocean includes the potential for 53.12 cubic feet per second (cfs) offsite runoff during emergency storm runoff overflow, to include 9.12 cfs from the county right-of-way along Lower Honoapiilani Road and 44 approximately cfs from Napili Villas development, upstream in the same watershed. In order to further reduce the direct runoff into the ocean at the Kahana Sunset AOAO drainage, the Department encourages the Applicant to continue discussions, where possible, with neighbors, including Napili Villas, to first, share the findings of the PDR

(since it is a public document) as a way to educate the Napili Villas owners about the drainage volume into the ocean; second, to allow the neighbors to discuss possibilities of future drainage improvements that would minimize emergency storm runoff from the Napili Villas neighboring property into the Applicant's drainage system; and third, the Department encourages the Applicant to continue its dialog with the County of Maui DPW regarding planned drainage improvements to the county rights-of-way that currently drain runoff into the Kahana Sunset AOAO property. The outcome of such dialog is the community's better understanding of the potential solutions to minimizing direct storm water runoff into the ocean; and

- The Department also acknowledges concerns from neighboring property owners about the proposed Change in Zoning (CIZ) to H-M, which would allow for construction at Kahana Sunset to six-stories. This community meeting would also help the Applicant to understand its neighbors' concerns regarding the Applicant's proposed CIZ.

2. The Department is encouraged that the Kahana Sunset is willing to establish a formal vertical public beach access from the Lower Honoapiilani Road to the ocean along the southern setback of its property. For the Final EA, please incorporate possible solutions for stairs down to the beach by including the alternative of sharing the existing concrete stairsteps that enter the beach on the adjoining property. Since stairs at this location already exist, look at incorporating the neighboring property's stairs into the beach access design plan.

3. The Department asks that the Applicant include an analysis of the proposed new seawall's impacts on the beach profile fronting the seawall location, as depicted in Figure 10 of the Concept Master Plan. In Figure 10, the location of the new seawall at the drain outfall and north of the proposed stairs forms a convex plan-view shape, creating a lawn behind the seawall between the proposed new walkways and the drainage outlet area. The Applicant is asked to analyze the impact that this convex configuration of the seawall will have on focusing wave energy against the seawall, resulting in potential future loss of beach at this location. The Department reasons that if beach is lost due to the seawall plan-view convex configuration, as proposed, then the Applicant will be faced with a similar situation of an undermined seawall at this location. However, if the proposed seawall is reconfigured in a concaved plan-view shape, eliminating the lawn area between the drain outfall and the new stairs and replacing the lawn with more sandy beach, the Department reasons that a concaved-plan-view configuration will further dissipate wave energy at this location, which in turn will build a sandy beach, preserving a beach and further protecting the seawall from direct wave energy. The proposed convex

plan-view seawall configuration in Figure 10 will focus wave energy on the seawall, which, in turn, will remove sand at the beach in front of the proposed seawall, leading to potential further erosion and requirement for further seawall protection. Please examine this suggested change in seawall configuration to a concaved seawall plan-view configuration in Figure 10 as part of the Final EA.

Thank you for your cooperation. If additional clarification is required, please contact Coastal Resources Planner James Buika by email at james.buika@mauicounty.gov or by phone at (808) 270-6271.

Sincerely,

WILLIAM SPENCE
Planning Director

xc: Michele Chouteau McLean, Deputy Planning Director (PDF)
Clayton I. Yoshida, AICP, Planning Program Administrator (PDF)
Joseph W. Alueta, Acting Planning Program Administrator (PDF)
James A. Buika, Coastal Resources Planner (PDF)
Tara Miller, University of Hawaii Sea Grant Extension Program (PDF)
Maui Planning Commissioners
Rowena Dagdag-Andaya, Deputy Public Works Director (PDF)
Samuel J. Lemmo, Department of Land and Natural Resources-Office of Conservation and Coastal Lands (PDF)
Daniel L. Ornellas, Department of Land and Natural Resources-Land Division, Maui (PDF)
Project File
General File

WRS:JAB:cr
K:\WP_DOCS\PLANNING\EA\2012\0002_KahanaSunset\MPC DEA\Draft EA Comments, Planning Department, vFINAL, 03.09.13.doc

CHRIS HART
& PARTNERS, INC.
Landscape Architecture
City & Regional Planning

January 9, 2013

Assistant Chief Victor K. Ramos
Police Department
55 Mahalani Street
Wailuku, HI 96793

Dear Asst. Chief Ramos:

Re: **Draft Environmental Assessment** for the Proposed Kahana Sunset Shoreline and Site Improvements at TMK: (2) 4-3-003:015 Lahaina, Maui, Hawaii. (EA 2012-0002), (SM1 2012-0003), (SSV 2012-0002), (CPA 2012-0003), (CIZ 2012-0007)

Thank you for your October 19, 2012 memorandum in response to the Draft Environmental Assessment (EA) for the subject project. We acknowledge that your department has no recommendation or comment to offer on the project.

If you have any further questions, please contact Raymond Cabebe of our office, or me.

Sincerely,

Jordan E. Hart
President
Principal Land Planner

JEH:rrc
attachment

c: Ms. Jacqueline Scheibel
Mr. Keith Meyer
Ms. Karen Dedman
Ms. Karen Krenz

115 N. Market Street, Wailuku, Maui, Hawaii 96793-1717 • Ph 808-242-1955 • Fax 808-242-1956
www.chpmaui.com

ALAN M. ARAKAWA
MAYOR

OUR REFERENCE

YOUR REFERENCE

POLICE DEPARTMENT

COUNTY OF MAUI

55 MAHALANI STREET
WAILUKU, HAWAII 96793
(808) 244-6400
FAX (808) 244-6411

GARY A. YABUTA
CHIEF OF POLICE

CLAYTON N.Y.W. TOM
DEPUTY CHIEF OF POLICE

'12 OCT 23 P1:47

October 19, 2012

MEMORANDUM

TO : CLAYTON I. YOSHIDA, AICP
DEPARTMENT OF PLANNING

FROM : GARY A. YABUTA, CHIEF OF POLICE

SUBJECT : PERMIT NO. : CIZ 2012/0007
TMK : (2) 4-3-003:015
Project Name : Kahana Sunset Shoreline and Site Improvements
Applicant : Kahana Sunset AOAO

_x_ No recommendation or comment to offer.

___ Refer to enclosed comments and/or recommendations.

Thank you for giving us the opportunity to comment on this project.

Assistant Chief Victor Ramos
For: GARY A. YABUTA
Chief of Police

CHRIS HART
& PARTNERS, INC.
Landscape Architecture
City & Regional Planning

January 9, 2013

Mr. Reid K. Siarot, State Land Surveyor
Survey Division
Department of Accounting and General Services
P.O. Box 119
Honolulu, Hawaii 96810-0119

Dear Mr. Siarot:

Re: **Draft Environmental Assessment** for the Proposed Kahana Sunset Shoreline and Site Improvements at TMK: (2) 4-3-003:015 Lahaina, Maui, Hawaii. (EA 2012-0002), (SM1 2012-0003), (SSV 2012-0002), (CPA 2012-0003), (CIZ 2012-0007)

Thank you for your October 2, 2012 memorandum in response to the Draft Environmental Assessment (EA) for the subject project.

We acknowledge your statement that no Government Survey Triangulation Stations or Benchmarks are affect by this project and that the Survey Division does not have any objections to the proposed project.

If you have any further questions, please contact Raymond Cabebe of our office, or me.

Sincerely,

Jordan E. Hart
President
Principal Land Planner

JEH:rrc
attachment

c: Ms. Jacqueline Scheibel
Mr. Keith Meyer
Ms. Karen Dedman
Ms. Karen Krenz

115 N. Market Street, Wailuku, Maui, Hawaii 96793-1717 • Ph 808-242-1955 • Fax 808-242-1956
www.chpmaui.com

12/5 & 72

NEIL ABERCROMBIE
GOVERNOR

DEAN H. SEKI
COMPTROLLER

MARIA E. ZIELINSKI
DEPUTY COMPTROLLER

STATE OF HAWAI'I
DEPARTMENT OF ACCOUNTING AND GENERAL SERVICES
P.O. BOX 119, HONOLULU, HAWAII 96810-0119

Response refer to:
Ma-219(12)

DEPT. OF PLANNING
COUNTY OF MAUI
OCT - 4 2012
RECEIVED

October 2, 2012

MEMORANDUM

TO: William R. Spence, Director
Department of Planning, County of Maui

ATTN: Clayton I. Yoshida, AICP
Planning Program Administrator

FROM: Reid K. Siarot, State Land Surveyor
DAGS, Survey Division

SUBJECT: Kahana Sunset Shoreline and Site Improvements
Applicant: Kahana Sunset AOAO
Permit No.: EA 2012/0002, SMI 2012/0003, SSV 2012/0002,
CPA 2012/0003, CIZ 2012/0007
TMK: 4-3-03: 15

The subject proposal has been reviewed and confirmed that no Government Survey Triangulation Stations or Benchmarks are affected. Survey has no objections to the proposed project.

Should you have any questions, please call me at 586-0390.

CHRIS HART
& PARTNERS, INC.
Landscape Architecture
City & Regional Planning

January 9, 2013

Mr. Jesse K. Souki, Director
Office of Planning
Department of Business, Economic Planning & Tourism
P.O. Box 2359
Honolulu, Hawaii 96804

Attention: Mr. Leo Asuncion

Dear Mr. Souki:

Re: **Draft Environmental Assessment** for the Proposed Kahana Sunset Shoreline and Site Improvements at TMK: (2) 4-3-003:015 Lahaina, Maui, Hawaii. (EA 2012-0002), (SM1 2012-0003), (SSV 2012-0002), (CPA 2012-0003), (CIZ 2012-0007)

Thank you for your October 23, 2012 letter in response to the Draft Environmental Assessment (EA) for the subject project. We offer the following responses to your comments as enumerated in your letter:

1. The "assumed shoreline" is the proposed shoreline delineated by Mr. Reid Siarot, State Surveyor, in his December 5, 2011 letter (**See**: Appendix "E" "Shoreline Survey Map", Draft EA.

2. The project engineers determined that the failure of the existing seawall was due to the faulty design of its foundation. The proposed seawall foundation will be anchored to bedrock, thereby stabilizing the shoreline at this location. In the context of the entire length of Keonenui Bay, all of the properties have some form of artificial armoring against shoreline erosion. The Final EA will clarify this and also analyze the project in terms of Act 286, Session Laws of Hawaii 2012. The obvious climate change aspect affecting this project is sea level rise resulting in increased erosion and inundation of land. Any alternative measure of remediation would have to be undertaken simultaneously by all of the property owners in the bay.

3. The purpose of the zoning change from R-3 Residential to H-M Hotel is to bring the existing use and structures into compliance with

115 N. Market Street, Wailuku, Maui, Hawaii 96793-1717 • Ph 808-242-1955 • Fax 808-242-1956
www.chpmaui.com

current Maui County zoning code. (The "M" indicates "medium" as in density; in between the lowest hotel density "H-1" and highest density "H-2".) There are no plans to expand the project within the shoreline setback area other than what is described within the EA. Any additional development would have to comply with the current Maui Planning Commission Shoreline Rules. The Final EA will clarify this subject.

4. Kahana Sunset is exploring the options for public access and will have a concept plan included in the Final EA.

If you have any further questions, please contact Raymond Cabebe of our office, or me.

Sincerely,

Jordan E. Hart
President
Principal Land Planner

JEH:rrc
attachment

c: Ms. Jacqueline Scheibel
Mr. Keith Meyer
Ms. Karen Dedman
Ms. Karen Krenz

NEIL ABERCROMBIE
GOVERNOR
RICHARD C. LIM
DIRECTOR
MARY ALICE EVANS
DEPUTY DIRECTOR
JESSE K. SOUKI
DIRECTOR
OFFICE OF PLANNING

DEPARTMENT OF BUSINESS, ECONOMIC DEVELOPMENT & TOURISM

Telephone (808) 587-2846
Fax (808) 587-2824

OFFICE OF PLANNING
235 South Beretania Street, 6th Floor, Honolulu, Hawaii 96813
Mailing Address: P.O. Box 2359, Honolulu, Hawaii 96804

'12 OCT 25 P12:52

Ref. No. P-13757

October 23, 2012

Mr. Clayton Yoshida, Planning Program Administrator
Department of Planning
County of Maui
250 South High Street
Wailuku, Hawaii 96793

Dear Mr. Yoshida:

Subject: Draft Environmental Assessment for Kahana Sunset Shoreline and Site Improvements, Tax Map Key: (2)-4-3-003: 015, Maui, Hawaii

Thank you for the opportunity to provide comments on the Draft Environmental Assessment (Draft EA) (EA 2012/0002), for the proposed Kahana Sunset Shoreline and Site Improvements, Tax Map Key: (2)-4-3-003: 015, Maui, Hawaii.

The Office of Planning has reviewed the subject Draft EA and has the following comments to offer:

1. According to the information provided by the Draft EA, on page 6, Building "A" is now approximately 8 feet and Building "F" is approximately 10 feet from the assumed shoreline while Building "A" was 15 feet and Building "F" was 50 feet from the shoreline when the existing apartment-condominium was constructed in 1971. The Final EA should clarify the "assumed shoreline," pursuant to the definition of shoreline in Hawaii Revised Statutes §205A-1.

2. Given that the shoreline erosion in front of the subject property in past decades has caused threats upon public safety and resulted in emergency repairs of the seawall, the Final EA should assess and explain why reconstruction of the seawall, which will be retreated as far back as 30 feet mauka from the proposed certified shoreline (on page 53, retreat of approximately 10 to 30 feet from the existing seawall location), is a long-term solution that will stabilize the bank at the shoreline of Keonenui Bay as stated by the Draft EA on page 8. The Final EA should consider climate change adaptation priority guidelines enacted by Act 286, Session Laws of Hawaii 2012, in order to meet the objectives and policies of reducing hazard to life and property from coastal hazards, including storm waves and shoreline erosion.

3. The Draft EA, on page 14, described that all of existing Buildings "A" and "F", and portions of Building "B" are within the shoreline setback area, pursuant to §12-203-4, Shoreline Rules for the Maui Planning Commission. The Final EA should discuss whether the proposed zoning change from R-3 Residential to H-M (Hotel-Multi-Family) Hotel District, on page 12, will result in expanded or new structures within the area that has been heavily threatened by coastal erosion.

4. On page 16 of the Draft EA, the subject property is located along Keonenui Bay where the sandy beach has its greatest width fronting the Kahana Sunset. On page 51, "Kahana Sunset is continuing to work with the Department of Land and Natural Resources (DLNR) and the County to provide a practical solution for providing public access to the shoreline." The Final EA should provide information as to what progress has been made to provide public access to the beach in front of the subject property.

If you have any questions regarding this comment letter, please contact Leo Asuncion, Coastal Zone Management Program Manager, at (808) 587-2875.

Sincerely,

Jesse K. Souki
Director

CHRIS HART
& PARTNERS, INC.
Landscape Architecture
City & Regional Planning

January 9, 2013

Mr. Jobie M.K. Masagatani, Chairman Designate
Hawaiian Homes Commission
Department of Hawaiian Home Lands
P.O. Box 1879
Honolulu, HI 96805

Dear Mr. Masagatani:

Re: **Draft Environmental Assessment** for the Proposed Kahana Sunset Shoreline and Site Improvements at TMK: (2) 4-3-003:015 Lahaina, Maui, Hawaii. (EA 2012-0002), (SM1 2012-0003), (SSV 2012-0002), (CPA 2012-0003), (CIZ 2012-0007)

Thank you for your October 22, 2012 "no comment" letter in response to the Draft Environmental Assessment (EA) for the subject project.

If you have any further questions, please contact Raymond Cabebe of our office, or me.

Sincerely,

Jordan E. Hart
President
Principal Land Planner

JEH:rrc
attachment

c: Ms. Jacqueline Scheibel
Mr. Keith Meyer
Ms. Karen Dedman
Ms. Karen Krenz

115 N. Market Street, Wailuku, Maui, Hawaii 96793-1717 • Ph 808-242-1955 • Fax 808-242-1956
www.chpmaui.com

NEIL ABERCROMBIE
GOVERNOR
STATE OF HAWAII

JOBIE M. K. MASAGATANI
CHAIRMAN DESIGNATE
HAWAIIAN HOMES COMMISSION

MICHELLE K. KAUHANE
DEPUTY TO THE CHAIRMAN

STATE OF HAWAI'I
DEPARTMENT OF HAWAIIAN HOME LANDS
P. O. BOX 1879
HONOLULU, HAWAI'I 96805

DEPT. OF PLANNING
COUNTY OF MAUI
RECEIVED
'12 NOV -1 P2:53

October 22, 2012

County of Maui
Department of Planning
Attn: Mr. Clayton I. Yoshida, AICP
Planning Program Administrator
250 South High Street
Wailuku, Maui, Hawaii 96793

Dear Mr. Yoshida:

Subject: Kahana Sunset Shoreline and Site Improvements

Applicant: Kahana Sunset AOAO
Permit No. EA2012/002, SM1 2012/003, SSV 2012/002, CPA 2012/003, CIZ 2012/007
TMK: (2) 4-3-003:015

Thank you for the opportunity to review the Kahana Sunset Shoreline and Site Improvements.

The Department of Hawaiian Homes Lands has no comment to offer at this time. If you have any questions, please contact our Planning Office at (808) 620-9480.

Aloha,

Jobie M.K. Masagatani, Chairman Designate
Hawaiian Homes Commission

CHRIS HART
& PARTNERS, INC.
Landscape Architecture
City & Regional Planning

January 9, 2013

Ms. Marja Leivo, Child Care Program Specialist
Child Care Program Office
Department of Human Services
1390 Miller Street, Room 209
Honolulu, Hawaii 96813

Dear Ms. Leivo:

Re: **Draft Environmental Assessment** for the Proposed Kahana Sunset Shoreline and Site Improvements at TMK: (2) 4-3-003:015 Lahaina, Maui, Hawaii. (EA 2012-0002), (SM1 2012-0003), (SSV 2012-0002), (CPA 2012-0003), (CIZ 2012-0007)

Thank you for your October 5, 2012 "no comment" response to the Draft Environmental Assessment (EA) for the subject project.

If you have any further questions, please contact Raymond Cabebe of our office, or me.

Sincerely,

Jordan E. Hart
President
Principal Land Planner

JEH:rrc
attachment

c: Ms. Jacqueline Scheibel
Mr. Keith Meyer
Ms. Karen Dedman
Ms. Karen Krenz

115 N. Market Street, Wailuku, Maui, Hawaii 96793-1717 • Ph 808-242-1955 • Fax 808-242-1956
www.chpmaui.com

AGENCY NAME	Dept. of Human Services	PHONE	808-586-7112

Agency Transmittal – (EA 2012/0002, SM1 2012/0003, SSV 2012/0002, CPA 2012/0003, CIZ 2012/0007)
September 27, 2012
Page 3

COMMENT/RECOMMENDATION BOX			
Signed:		Dated:	
Print Name:		Title:	
NO COMMENT			
Signed:	Marja Leivo	Dated:	10-5-2012
Print Name:	Marja Leivo	Title:	Child Care Program Specialist

'12 OCT -5 P2:53

'12 OCT -5 P2:53

CHRIS HART
& PARTNERS, INC.
Landscape Architecture
City & Regional Planning

January 9, 2013

Mr. Skippy Hau, Aquatic Biologist
Division of Aquatic Resources
Department of Land & Natural Resources
130 Mahalani Street
Wailuku, HI 96793

Dear Mr. Hau:

Re: **Draft Environmental Assessment** for the Proposed Kahana Sunset Shoreline and Site Improvements at TMK: (2) 4-3-003:015 Lahaina, Maui, Hawaii. (DAR 4492) (EA 2012-0002), (SM1 2012-0003), (SSV 2012-0002), (CPA 2012-0003), (CIZ 2012-0007)

Thank you for your October 22, 2012 memorandum in response to the Draft Environmental Assessment (EA) for the subject project. We offer the following responses to your comments:

Setback. The discrepancy was a typographic error and will be corrected in the Final EA. The Average Lot Depth setback is 76.48 feet.

Seawall. The properties fronting the entire shoreline on Keonenui Bay between Haukoe and Alaeloa Points are armored by individual seawalls that together form a nearly contiguous structure along the shoreline. The shoreline fronting Kahana Sunset has an annual erosion hazard rate (AEHR) between 0.8 and 1.2 feet per year. Although seawalls tend to increase beach erosion by magnifying wave energy, all of the seawalls on the bay have served to prevent loss of land and prevent earthen soils from eroding and causing siltation of coastal waters. While the proposed seawall does not directly front Buildings "A" and "F", it will prevent flank erosion that will certainly occur without the proposed seawall in place. The *Preliminary Structural Engineering Report* (AAA Structural Engineering, May 2012) contains preliminary drawings of the seawall that are conceptual. Final drawings may include weep holes in the seawall appropriately spaced to reduce hydrostatic pressure on the *mauka* side of the wall.

Sink Holes. The *Geoanalytical Report* (Weidig Geoanalysts, March 2006) explains that the "sink holes" formed because the base of existing seawall was founded on sand and not on bedrock. The report also discusses the

115 N. Market Street, Wailuku, Maui, Hawaii 96793-1717 • Ph 808-242-1955 • Fax 808-242-1956
www.chpmaui.com

hydrostatic pressure build up behind the existing seawall caused by local irrigation, rainfall, and tidal changes, and the movement of this transient ground water. The proposed new seawall will have a more substantial foundation anchored to bedrock which is expected to prevent future sink holes.

Beach Access. A conceptual design for a proposed beach access through the Kahana Sunset property will be provided in the Final EA.

Drainage. The 36-inch drainline and its outfall is further described in the *Preliminary Drainage Report* (M. Siah, April 2012) and is also shown in Figure No. 9.4, Photo No. 28. In the Final EA, the description will expanded to provide more detail. Also noted in the report, the proposed action will actually slightly decrease storm runoff from the Kahana Sunset property. In addition, the Kahana Sunset storm runoff (11.35 cfs) represents only eighteen percent (18%) of the maximum total storm water outflow. This takes into account absorption of storm water into landscaped areas. The Kahana Sunset drainage system was designed to handle onsite storm runoff. It is <u>not</u> expected that Kahana Sunset will be held responsible for retention of storm water generated by offsite upland properties.

Honu. The waters around all of the islands are known habitats for the Hawaiian monk seal and the green and hawksbill turtles; however, there are no officially designated "critical habitats" for these species at this time in the waters surrounding Maui. The following procedures will be implemented to mitigate any possible impact to endangered species.

- A visual survey of the project area will be performed just prior to commencement or resumption of construction activity to ensure that no protected species are in the project area. If protected species are detected, construction activities will be postponed until the animals voluntarily leave the area.
- If any listed species enter the project area during the conduct of construction activities, all activities will cease until the animals voluntarily depart the area.
- All on-site personnel will be apprised of the status of any listed species potentially present in the project area and the protections afforded to those species under Federal laws.

If you have any further questions, please contact Raymond Cabebe of our office, or me.

Sincerely,

Jordan E. Hart
President
Principal Land Planner

JEH:rrc
attachment

c: Ms. Jacqueline Scheibel
Mr. Keith Meyer
Ms. Karen Dedman
Ms. Karen Krenz

DIVISION OF AQUATIC RESOURCES - MAUI
DEPARTMENT OF LAND & NATURAL RESOURCES
130 Mahalani Street
Wailuku, Hawaii 96793
October 22, 2012

To: Lydia Morikawa, Land

From: Skippy Hau, Aquatic Biologist

Subject: Draft EA Kahana Sunset Shoreline and Site Improvements
(DAR 4492) (Due Date: November 1, 2012)

(P.11) F. DESCRIPTION OF PROPOSED ACTION (PREFERRED ALTERNATIVE) The 36-inch corrugated metal drainline and drainage outfall should be better described.

Does the structural engineering report mean continued erosion from the beach?

The retaining walls may cause erosion of the sand beach.

(P.13) The shoreline setback determination was 76.48 feet. Under the existing situation, it will not protect buildings A & F from large swells and erosion.

Is runoff being allowed to drain into the ground or the sand beach?

(P.25) Drainage runoff should be minimized. It appears the most of the drainage is directed to the 36-inch outfall. The proposal should be describing how runoff will be retained and allowed to naturally recharge into the ground or be redirected into property landscaping to reduce watering. Could the drainage be causing some of the erosion by sea walls during heavy downpours?

(P.26) The replacement of the 36-inch corrugated metal pipe should be evaluated for leaks. Will mitigation actions include underground retention culverts to reduce the flow of runoff during heavy rains?

(P.29) We strongly support any improvements to increase public access to the beach and shoreline.

(P.43) 76.42 feet shoreline setback is different from page 13.

(P.47) There have been reports of threatened honu (*Chelonia mydas*) basking in nearby coves. There have been no turtle nesting in this location. Honu are often observed swimming in nearby waters.

FIGURE 9.4 SITE PHOTOGRAPHS
Could the sinkhole conditions be caused from the drainage directed to the outfall? It appears the sinkholes are caused by ground water moving substrate. If sand were used to fill behind the seawalls without compaction, this could cause instability. The addition of landscape watering, heavy rains, tidal changes and large surf appears to contribute to the eventual erosion over time. Is there sufficient weep holes to allow groundwater from building up behind the sea walls?

Does the dry well allow for sufficient water recharge into the ground? If not, retention drainage or redirection of landscape drainage may be needed to relieve the outfall. (Photo 30) "Typical sink hole behind seawall" appears to indicate runoff drainage is eroding sand from existing areas.

APPENDIX G. The March 13, 2006 Geoanalytical Report confirmed groundwater in borings at Building "F."

Earth Pressures….. undrained by weep holes or a back drainage system. To address sink holes, should weep holes be added to the sea walls or specifically by building F? How many of the walls had weep holes?

CHRIS HART
& PARTNERS, INC.
Landscape Architecture
City & Regional Planning

January 9, 2013

Mr. Edward Underwood, Administrator
Division of Boating & Ocean Resources
Department of Land & Natural Resources
P.O. Box 621
Honolulu, Hawaii 96809

Dear Mr. Underwood:

Re: **Draft Environmental Assessment** for the Proposed Kahana Sunset Shoreline and Site Improvements at TMK: (2) 4-3-003:015 Lahaina, Maui, Hawaii. (EA 2012-0002), (SM1 2012-0003), (SSV 2012-0002), (CPA 2012-0003), (CIZ 2012-0007)

Thank you for your October 10, 2012 "we have no comments" response to the Draft Environmental Assessment (EA) for the subject project.

If you have any further questions, please contact Raymond Cabebe of our office, or me.

Sincerely,

Jordan E. Hart
President
Principal Land Planner

JEH:rrc
attachment

c: Ms. Jacqueline Scheibel
Mr. Keith Meyer
Ms. Karen Dedman
Ms. Karen Krenz

115 N. Market Street, Wailuku, Maui, Hawaii 96793-1717 • Ph 808-242-1955 • Fax 808-242-1956
www.chpmaui.com

NEIL ABERCROMBIE
GOVERNOR OF HAWAII

WILLIAM J. AILA, JR.
CHAIRPERSON
BOARD OF LAND AND NATURAL RESOURCES
COMMISSION ON WATER RESOURCE MANAGEMENT

STATE OF HAWAII
DEPARTMENT OF LAND AND NATURAL RESOURCES
LAND DIVISION

POST OFFICE BOX 621
HONOLULU, HAWAII 96809

October 9, 2012

MEMORANDUM

TO: **DLNR Agencies:**
X Div. of Aquatic Resources
X Div. of Boating & Ocean Recreation
X Engineering Division
__Div. of Forestry & Wildlife
__Div. of State Parks
X Commission on Water Resource Management
X Office of Conservation & Coastal Lands
X Land Division – Maui District
X Historic Preservation

RECEIVED
LAND DIVISION
2012 OCT 11 P 3:17
DEPT. OF LAND & NATURAL RESOURCES
STATE OF HAWAII

FROM: Russell Y. Tsuji, Land Administrator
SUBJECT: Kahana Sunset Shoreline and Site Improvements
LOCATION: Lahaina, Island of Maui; TMK: (2) 4-3-003:015
APPLICANT: Kahana Sunset AOAO

Transmitted for your review and comment on the above referenced document. We would appreciate your comments on this document. Please submit any comments by November 1, 2012.

Only one (1) copy of the CD is available for your review in Land Division office, Room 220.

If no response is received by this date, we will assume your agency has no comments. If you have any questions about this request, please contact Lydia Morikawa at 587-0410. Thank you.

Attachments

( ) We have no objections.
(X) We have no comments.
( ) Comments are attached.

Signed:
Print Name: Edward R. Underwood
Date: 10/16/12

cc: Central Files

CHRIS HART
& PARTNERS, INC.
Landscape Architecture
City & Regional Planning

January 9, 2013

Mr. Carty S. Chang, Chief Engineer
Engineering Division
Department of Land & Natural Resources
P.O. Box 621
Honolulu, Hawaii 96809

Dear Mr. Chang:

Re: **Draft Environmental Assessment** for the Proposed Kahana Sunset Shoreline and Site Improvements at TMK: (2) 4-3-003:015 Lahaina, Maui, Hawaii. (EA 2012-0002), (SM1 2012-0003), (SSV 2012-0002), (CPA 2012-0003), (CIZ 2012-0007)

Thank you for your October 16, 2012 response to the Draft Environmental Assessment (EA) for the subject project.

We acknowledge your confirmation that the project site is located in Flood Zones X, AE and VE. The applicant will comply with rules and regulations of the National Flood Insurance Program (NFIP) and Chapter 19.62 "Flood Hazard Areas", Maui County Code, where the proposed project falls within the Special Flood Hazard Area.

If you have any further questions, please contact Raymond Cabebe of our office, or me.

Sincerely,

Jordan E. Hart
President
Principal Land Planner

JEH:rrc
attachment

c: Ms. Jacqueline Scheibel
Mr. Keith Meyer
Ms. Karen Dedman
Ms. Karen Krenz

115 N. Market Street, Wailuku, Maui, Hawaii 96793-1717 • Ph 808-242-1955 • Fax 808-242-1956
www.chpmaui.com

NEIL ABERCROMBIE
GOVERNOR OF HAWAII

WILLIAM J. AILA, JR.
CHAIRPERSON
BOARD OF LAND AND NATURAL RESOURCES
COMMISSION ON WATER RESOURCE MANAGEMENT

RECEIVED
LAND DIVISION

2012 OCT 18 A 9:34

DEPT. OF LAND &
NATURAL RESOURCES
STATE OF HAWAII

STATE OF HAWAII
DEPARTMENT OF LAND AND NATURAL RESOURCES
LAND DIVISION

POST OFFICE BOX 621
HONOLULU, HAWAII 96809

October 9, 2012

MEMORANDUM

TO: **DLNR Agencies:**
X Div. of Aquatic Resources
X Div. of Boating & Ocean Recreation
X Engineering Division
__Div. of Forestry & Wildlife
__Div. of State Parks
X Commission on Water Resource Management
X Office of Conservation & Coastal Lands
X Land Division – Maui District
X Historic Preservation
X Ian Hirokata

FROM: Russell Y. Tsuji, Land Administrator
SUBJECT: Kahana Sunset Shoreline and Site Improvements
LOCATION: Lahaina, Island of Maui; TMK: (2) 4-3-003:015
APPLICANT: Kahana Sunset AOAO

Transmitted for your review and comment on the above referenced document. We would appreciate your comments on this document. Please submit any comments by November 1, 2012.

Only one (1) copy of the CD is available for your review in Land Division office, Room 220.

If no response is received by this date, we will assume your agency has no comments. If you have any questions about this request, please contact Lydia Morikawa at 587-0410. Thank you.

Attachments

( ) We have no objections.
( ) We have no comments.
(X) Comments are attached.

Signed:
Print Name: Carty S. Chang, Chief Engineer
Date: OCT 16 2012

cc: Central Files

DEPARTMENT OF LAND AND NATURAL RESOURCES
ENGINEERING DIVISION

LD/LydiaMOrikawa
Ref: SMAUsePermitKahannaSunsetShoreline
Maui.585

COMMENTS

(X) **We confirm that the project site, according to the Flood Insurance Rate Map (FIRM), is located in Zones X, AE and VE. The National Flood Insurance Program does not have any regulations for developments within Zone X however, it does regulate developments within Zones AE and VE as indicated in bold letters below.**

( ) Please take note that the project site, according to the Flood Insurance Rate Map (FIRM), is located in Zone.

( ) Please note that the correct Flood Zone Designation for the project site according to the Flood Insurance Rate Map (FIRM) is ___.

(X) **Please note that the project must comply with the rules and regulations of the National Flood Insurance Program (NFIP) presented in Title 44 of the Code of Federal Regulations (44CFR), whenever development within a Special Flood Hazard Area is undertaken. If there are any questions, please contact the State NFIP Coordinator, Ms. Carol Tyau-Beam, of the Department of Land and Natural Resources, Engineering Division at (808) 587-0267.**

Please be advised that 44CFR indicates the minimum standards set forth by the NFIP. Your Community's local flood ordinance may prove to be more restrictive and thus take precedence over the minimum NFIP standards. If there are questions regarding the local flood ordinances, please contact the applicable County NFIP Coordinators below:

( ) Mr. Mario Siu Li at (808) 768-8098 or Ms. Ardis Shaw-Kim at (808) 768-8296 of the City and County of Honolulu, Department of Planning and Permitting.

( ) Mr. Frank DeMarco at (808) 961-8042 of the County of Hawaii, Department of Public Works.

(X) **Mr. Francis Cerizo at (808) 270-7771 of the County of Maui, Department of Planning.**

( ) Ms. Wynne Ushigome at (808) 241-4980 of the County of Kauai, Department of Public Works.

( ) The applicant should include water demands and infrastructure required to meet project needs. Please note that projects within State lands requiring water service from the Honolulu Board of Water Supply system will be required to pay a resource development charge, in addition to Water Facilities Charges for transmission and daily storage.

( ) The applicant should provide the water demands and calculations to the Engineering Division so it can be included in the State Water Projects Plan Update.

( ) Additional Comments: _____

( ) Other: _____

Should you have any questions, please call Ms. Suzie Agraan of the Planning Branch at 587-0258.

Signed: _____
CARTY S. CHANG, CHIEF ENGINEER

Date: OCT 16 2012

CHRIS HART
& PARTNERS, INC
Landscape Architecture
City & Regional Planning

January 31, 2013

Mr. Samuel J. Lemmo, Administrator
Office of Conservation and Coastal Lands
Department of Land and Natural Resources
P.O. Box 621
Honolulu, Hawaii 96809

Attention: Mr. Brad Romine

Dear Mr. Lemmo:

RE: **Draft Environmental Assessment** for the Proposed Kahana Sunset Shoreline and Site Improvements at TMK: (2) 4-3-003:015 Lahaina, Maui, Hawaii. (EA 2012-0002)(SM1 2012-0003)(SSV 2012-0002)(CPA 2012-0003)(CIZ 2012-0007) MA-13-29.

Thank you for your November 5, 2012 letter in response to the Draft Environmental Assessment (EA) for the subject project. We are pleased that you found the Draft EA to be complete overall. We offer the following responses to your comments as enumerated in your memorandum:

1. Work will be conducted during the times of the year when tides and waves are the lowest. This is generally during the spring and summer months.
2. Beach quality sand that is excavated during demolition and construction will be returned to the beach.
3. If clay layers are discovered within the new beach area at beach grade following the existing slope, the clay will be excavated below grade and replaced with beach quality sand.
4. The applicant will be preparing a concept plan for an approximately 237 foot long beach access path along the property's south boundary for review by the appropriate State and County agencies. This plan will be included in the Final EA.

If you have any further questions, please contact Raymond Cabebe of our office, or me.

115 N. Market Street, Wailuku, Maui, Hawaii 96793-1717 • Ph 808-242-1955 • Fax 808-242-1956
www.chpmaui.com

Sincerely,

Jordan E. Hart
President
Land Planner

JEH:rrc
attachment

c: Ms. Jacqueline Scheibel
Mr. Keith Meyer
Ms. Karen Dedman
Ms. Karen Krenz

NEIL ABERCROMBIE
GOVERNOR OF HAWAII

WILLIAM J. AILA, JR.
CHAIRPERSON
BOARD OF LAND AND NATURAL RESOURCES
COMMISSION ON WATER RESOURCE MANAGEMENT

ESTHER KIA'AINA
FIRST DEPUTY

WILLIAM M. TAM
DEPUTY DIRECTOR - WATER

AQUATIC RESOURCES
BOATING AND OCEAN RECREATION
BUREAU OF CONVEYANCES
COMMISSION ON WATER RESOURCE MANAGEMENT
CONSERVATION AND COASTAL LANDS
CONSERVATION AND RESOURCES ENFORCEMENT
ENGINEERING
FORESTRY AND WILDLIFE
HISTORIC PRESERVATION
KAHOOLAWE ISLAND RESERVE COMMISSION
LAND
STATE PARKS

STATE OF HAWAII
DEPARTMENT OF LAND AND NATURAL RESOURCES
OFFICE OF CONSERVATION AND COASTAL LANDS

POST OFFICE BOX 621
HONOLULU, HAWAII 96809

DLNR.OCCL.BR

Correspondence: MA-13-29

RECEIVED
NOV - 5 2012

NOV 0 6 2012

CHRIS HART & PARTNERS, INC
Landscape Architecture and Planning
CV. Raymond 09/143

Clayton I. Yoshida, Planning Program Administrator
Department of Planning, County of Maui
250 South High Street
Wailuku, Maui, Hawaii 96793

Dear Mr. Yoshida,

SUBJECT: Comments on The Draft Environmental Assessment (EA) for Kahana Sunset Shoreline & Site Improvements at the Kahana Sunset Condominiums at 4909 Lower Honoapiilani Road, Lahaina, Maui, Hawaii 96761, TMK (2) 4-3-003:015.

The Department of Land and Natural Resources, Office of Conservation and Coastal Lands (OCCL) has reviewed the July 2012 Draft Environmental Assessment (Draft EA) for proposed Shoreline and Site Improvements at the Kahana Sunset Condominiums at 4909 Lower Honoapiilani Road, Lahaina, Maui, TMK (2) 4-3-003:015. Chris Hart and Partners, Inc. on behalf of the Kahana Sunset AOAO (the Applicant) is proposing construction of a replacement seawall fronting the shoreline of the subject property.

The subject property and adjacent properties fronting the shoreline at Keonenui Bay are armored by seawalls. A long-term trend of erosion, punctuated by seasonal erosion events, has caused portions of the existing seawall in the north of the subject property (between buildings "A" and "F") to fail. The seawall in this area has developed severe cracks and has been undermined, with sink holes appearing landward of the seawall.

The Applicant is recommending demolition of the existing seawall and stairs between buildings "A" and "F" and construction of a replacement seawall (approximately 125-feet long, 15-inch wide) and stairs (approximately 13-feet long) between 3 and 10 feet landward of the existing seawall. The seawall will be constructed on the landward side of the shoreline as delineated by the State Land Surveyor on November 15, 2011. The shoreline location has not been officially accepted by State, pending resolution of several encroaching structures fronting the subject property. Landward relocation of the seawall and stairs will have the effect of widening the beach by 3-10 feet in the project area.

OCCL has conducted a thorough review of the Draft EA and finds the document complete, overall. However, OCCL has four comments on technical aspects of the Draft EA, which we feel should be addressed in the Final EA.

1. The Draft EA notes that work will be conducted during the time of year when the tides are lowest. Work should also be conducted during summer when waves are lowest.

2. Any clean beach-quality sand excavated during demolition and construction should be returned to the beach fronting the seawall.

3. The Geoanalytical Report in the Draft EA (Appendix G) found clayey silt layers in borings conducted fronting Building "A" adjacent to the project site. Borings were not conducted within the project site. It is possible that excavation of the area behind the existing seawall will expose clay layers at or below the grade of the newly-widened beach area. If clay layers are discovered in this area, the clay should be excavated below beach grade and replaced with beach-quality sand to prevent erosion of clay and siltation of coastal waters during high waves and seasonal erosion.

4. Page 37 of the Draft EA, under Special Management Area Objective and Policies, (A) Recreational Resources states: *Public beach access exists at Hui Road E, approximately 500 feet to the south of the project site. The applicant is working cooperatively with the State Department of Land and Natural Resources (DLNR) and the County Planning Department to seek solutions to provide public access.* Please provide details on proposed solutions for improving public access to the beach fronting the subject property.

Thank you for the opportunity to comment on the Draft EA for this project. Please contact Sea Grant Extension Agent Brad Romine at OCCL, at 587-0049 or Bradley.M.Romine@Hawaii.gov, should you have any questions.

Sincerely,

SAMUEL J. LEMMO, Administrator
Office of Conservation and Coastal Lands

CC: Chris Hart & Partners, Inc.
Kahana Sunset AOAO
DLNR Chairperson
BLNR Maui Representative
DLNR Land, Russell Tsuji

CHRIS HART & PARTNERS, INC.
Landscape Architecture
City & Regional Planning

January 9, 2013

Mr. Alec Wong, P.E. Chief
Clean Water Branch
Department of Health
P.O. Box 3378
Honolulu, Hawaii 96801-3378

Dear Mr. Wong:

Re: **Draft Environmental Assessment** for the Proposed Kahana Sunset Shoreline and Site Improvements at TMK: (2) 4-3-003:015 Lahaina, Maui, Hawaii. (EA 2012-0002), (SM1 2012-0003), (SSV 2012-0002), (CPA 2012-0003),
(CIZ 2012-0007)

Thank you for your October 17, 2012 "no comments" letter in response to the Draft Environmental Assessment (EA) and your August 16, 2010 response to early consultation request for the subject project. We offer the following responses to your comments as enumerated in your August 16, 2010 letter:

1. Potential impacts to State waters.
   a. The proposed project is expected to improve the existing level of water quality since proposed onsite drain inlets will filter contaminants.
   b. The Water Quality Standards Map (October 1987) designates waters of Keonenui Bay as Class A. The recreational and aesthetic enjoyment uses of Class A will not be impacted by the proposed project.
   c. Water quality is not expected to be impacted by the proposed project since demolition and construction will not occur within State waters and storm water flows is not expected to increase.
2. National Pollutant Discharge Elimination System (NPDES) Permit. If it is deemed that an NPDES permit is required, the contractor or engineer shall obtain it.
   a. It is anticipated that less than one (1) acre will be disturbed in the course of this proposed project.
   b. It is not anticipated that hydrotesting water will be necessary.

115 N. Market Street, Wailuku, Maui, Hawaii 96793-1717 • Ph 808-242-1955 • Fax 808-242-1956
www.chpmaui.com

c. If construction dewatering is anticipated by the contractor, a Notice of Intent will be filed.

3. It is anticipated that other wastewater, not listed in No. 2 above, will not be generated; therefore, a NPDES individual permit will not be necessary.

4. No work, including the demolition of the old seawall, will occur seaward of the mean high water mark which delineates the navigable waters of the U.S., the jurisdiction of the Department of Army (DA). In addition, no dredged or fill material is anticipated to be discharged into the U.S. waters; therefore, a DA Section 404 permit is not required. The proposed actions will not affect the course, location, or condition of U.S. waters as to its navigable capacity; therefore, a DA Section 10 permit is also not required. Confirmation of permit requirements will be verified with the Department of Army.

5. The project contractor and/or the engineer will ensure compliance with the State Water Quality Standards.

Other Clean Water Branch standard comments do not apply to this project.

If you have any further questions, please contact Raymond Cabebe of our office, or me.

Sincerely,

Jordan E. Hart
President
Principal Land Planner

JEH:rrc
attachment

c: Ms. Jacqueline Scheibel
Mr. Keith Meyer
Ms. Karen Dedman
Ms. Karen Krenz

NEIL ABERCROMBIE
GOVERNOR OF HAWAII

LORETTA J. FUDDY, A.C.S.W., M.P.H.
DIRECTOR OF HEALTH

STATE OF HAWAII
DEPARTMENT OF HEALTH
P. O. BOX 3378
HONOLULU, HI 96801-3378

In reply, please refer to
DOH/CWB

10017PMR.12

'12 OCT 22 P3 :25

October 17, 2012

Mr. Clayton I. Yoshida, AICP
Planning Program Administrator
County of Maui
Department of Planning
250 South High Street
Wailuku, Hawaii 96793

Dear Mr. Yoshida:

SUBJECT: Comments on the Draft Environmental Assessment (DEA) for the Kahana Sunset Shoreline and Site Improvements Project Lahaina, Island of Maui, Hawaii
TMK: (2) 4-3-003:015 (LEA 12/02) (SMI 12/07) (SSV 12/02) (CPM 12/07) (CIZ 12/07)

The Department of Health (DOH), Clean Water Branch (CWB), has reviewed the subject document and has no comments at this time. The DOH-CWB provided comments on the Environmental Assessment Early Consultation Request for this project (Letter No. 08031PJF.10, dated August 16, 2010).

Please note that our review is based solely on the information provided in the subject document and its compliance with Hawaii Administrative Rules (HAR), Chapters 11-54 and 11-55. You may be responsible for fulfilling additional requirements related to our program. We recommend that you also read our standard comments on our website at: http://hawaii.gov/health/environmental/env-planning/wqm/landuse/landuse.html/CWB-standardcomment.pdf.

If you have any questions, please visit our website at: http://www.hawaii.gov/health/environmental/water/cleanwater/index.html, or contact the Engineering Section, CWB, at (808) 586-4309.

Sincerely,

ALEC WONG, P.E., CHIEF
Clean Water Branch

MR:jst

c: Mr. James A. Buika, County of Maui [via e-mail james.buika@mauicounty.gov only]
DOH-EPO [via e-mail only]

LINDA LINGLE
GOVERNOR OF HAWAII

CHIYOME L. FUKINO, M.D.
DIRECTOR OF HEALTH

RECEIVED
AUG 18 2010
CHRIS HART & PARTNERS, INC.
Landscape Architecture and Planning

STATE OF HAWAII
DEPARTMENT OF HEALTH
P.O. BOX 3378
HONOLULU, HAWAII 96801-3378

In reply, please refer to:
EMD / CWB

08031PJF.10

CC: Jason 091143

August 16, 2010

Mr. Matthew M. Slepin
Plannner
Chris Hart & Partners, Inc.
115 N. Market Street
Wailuku, Island of Maui, Hawaii 96793-1717

Dear Mr. Slepin:

SUBJECT: Environmental Assessment (EA) Early Consultation Request for Proposed Shoreline Erosion Mitigation and Bank Stabilization at Kahana Sunset Condominium Lahaina, Island of Maui, Hawaii TMK: (2) 4-3-003:015

The Department of Health, Clean Water Branch (CWB), has reviewed the subject document and offers these comments on your project.

Please note that our review is based solely on the information provided in the subject document and its compliance with the Hawaii Administrative Rules (HAR), Chapters 11-54 and 11-55. You may be responsible for fulfilling additional requirements related to our program. We recommend that you also read our standard comments on our website at: http://www.hawaii.gov/health/environmental/env-planning/landuse/CWB-standardcomment.pdf.

1. Any project and its potential impacts to State waters must meet the following criteria:

   a. Antidegradation policy (HAR, Section 11-54-1.1), which requires that the existing uses and the level of water quality necessary to protect the existing uses of the receiving State water be maintained and protected.

   b. Designated uses (HAR, Section 11-54-3), as determined by the classification of the receiving State waters.

   c. Water quality criteria (HAR, Sections 11-54-4 through 11-54-8).

2. You may be required to obtain a National Pollutant Discharge Elimination System (NPDES) permit for discharges of wastewater, including storm water runoff, into State surface waters (HAR, Chapter 11-55). For the following types of discharges into Class A or Class 2 State waters, you may apply for an NPDES general permit coverage by submitting a Notice of Intent (NOI) form:

   a. Storm water associated with construction activities, including clearing, grading, and excavation, that result in the disturbance of equal to or greater than one (1) acre of total land area. The total land area includes a contiguous area where multiple separate and distinct construction activities may be taking place at different times on different schedules under a larger common plan of development or sale. An NPDES permit is required before the start of the construction activities.

   b. Hydrotesting water.

   c. Construction dewatering effluent.

   You must submit a separate NOI form for each type of discharge at least 30 calendar days prior to the start of the discharge activity, except when applying for coverage for discharges of storm water associated with construction activity. For this type of discharge, the NOI must be submitted 30 calendar days before to the start of construction activities. The NOI forms may be picked up at our office or downloaded from our website at: http://www.hawaii.gov/health/environmental/water/cleanwater/forms/genl-index.html.

3. For types of wastewater not listed in Item No. 2 above or wastewater discharging into Class 1 or Class AA waters, you may need an NPDES individual permit. An application for an NPDES individual permit must be submitted at least 180 calendar days before the commencement of the discharge. The NPDES application forms may be picked up at our office or downloaded from our website at: http://www.hawaii.gov/health/environmental/water/cleanwater/forms/indiv-index.html.

4. Please contact the Army Corps of Engineers, Regulatory Branch (Tel. No.: 438-9258) to determine if this project requires a Section 404 Permit. Pursuant to Federal Water Pollution Control Act (commonly known as the "Clean Water Act" (CWA)), Paragraph 401(a)(1), a Section 401 Water Quality Certification (WQC) is required for "[a]ny applicant for Federal license or permit to conduct any activity including, but not limited to, the construction or operation of facilities, which may **result** in any discharge into the navigable waters..." (Emphasis added). The term "discharge" is defined in CWA, Subsections 502(16), 502(12), and 502(6); Title 40, Code of Federal Regulations, Section 122.2; and HAR, Chapter 11-54.

5. Please note that all discharges related to the project construction or operation activities, whether or not NPDES permit coverage and/or section 401 WQC are required, must comply with the State's Water Quality Standards. Noncompliance with water quality requirements contained in HAR, Chapter 11-54, and/or permitting requirements, specified in HAR, Chapter 11-55, may be subject to penalties of $25,000 per day per violation.

If you have any questions, please visit our website at: http://www.hawaii.gov/health/environmental/water/cleanwater/index.html, or contact the Engineering Section, CWB, at 586-4309.

Sincerely,

ALEC WONG, P.E., CHIEF
Clean Water Branch

JF:ml

c: DOH-EPO #I-3299 [via email only]

CHRIS HART
& PARTNERS, INC.
Landscape Architecture
City & Regional Planning

January 9, 2013

Ms. Patti Kitkowski, District Environmental Health Program Chief
Maui District Health Office
Department of Health
54 High Street
Wailuku, HI 96793

Dear Ms. Kitkowski:

Re: **Draft Environmental Assessment** for the Proposed Kahana Sunset Shoreline and Site Improvements at TMK: (2) 4-3-003:015 Lahaina, Maui, Hawaii. (EA 2012-0002), (SM1 2012-0003), (SSV 2012-0002), (CPA 2012-0003), (CIZ 2012-0007)

Thank you for your October 22, 2012 letter in response to the Draft Environmental Assessment (EA) for the subject project. We offer the following responses to your comments as enumerated in your letter:

1. If a National Pollutant Discharge Elimination System (NPDES) permit is required, the contractor or engineer shall obtain it. The Clean Water Branch has reviewed the project and provided comments.
2. No work, including the demolition of the old seawall, will occur seaward of the mean high water mark which delineates the navigable waters of the U.S., the jurisdiction of the Department of Army (DA). In addition, no dredged or fill material is anticipated to be discharged into the U.S. waters; therefore, a DA Section 404 permit is not required. The proposed actions will not affect the course, location, or condition of U.S. waters as to its navigable capacity; therefore, a DA Section 10 permit is also not required.
3. The contractor will obtain a noise permit prior to construction activities that are expected to exceed maximum permissible levels.

Other Department of Health standard comments do not apply to this project.

If you have any further questions, please contact Raymond Cabebe of our office, or me.

115 N. Market Street, Wailuku, Maui, Hawaii 96793-1717 • Ph 808-242-1955 • Fax 808-242-1956
www.chpmaui.com

Sincerely,

Jordan E. Hart
President
Principal Land Planner

JEH:rrc
attachment

c: Ms. Jacqueline Scheibel
Mr. Keith Meyer
Ms. Karen Dedman
Ms. Karen Krenz

NEIL ABERCROMBIE
GOVERNOR OF HAWAII

LORETTA J. FUDDY, A.C.S.W., M.P.H.
DIRECTOR OF HEALTH

LORRIN W. PANG, M.D., M.P.H.
DISTRICT HEALTH OFFICER

STATE OF HAWAII
DEPARTMENT OF HEALTH
MAUI DISTRICT HEALTH OFFICE
54 HIGH STREET
WAILUKU, HAWAII 96793

'12 OCT 23 P1:37

October 22, 2012

Mr. William R. Spence
Director
Department of Planning
County of Maui
250 South High Street
Wailuku, Hawaii 96793

Attention: Clayton I. Yoshida

Dear Mr. Spence:

Subject:	Kahana Sunset Shoreline and Site Improvements
Applicant:	Kahana Sunset AOAO
Permit No.:	EA 2012/0002, SM1 2012/0003, SSV 2012/0002, CPA 2012/0003, CIZ 2012/0007
TMK:	(2) 4-3-003:015
Project Location:	4909 Lower Honoapiilani Road, Lahaina, Maui Hawaii
Project Description:	Stabilize bank at the shoreline of Keonenui Bay in order to prevent future erosion

Thank you for the opportunity to review this project. We have the following comments to offer:

1. National Pollutant Discharge Elimination System (NPDES) permit coverage maybe required for this project. The Clean Water Branch should be contacted at 808 586-4309.

2. The Army Corp of Engineers should be contacted at (808) 438-9258 to identify whether a Federal license or permit is required for the demolition work of the old wall.

3. The noise created during the construction phase of the project may exceed the maximum allowable levels as set forth in Hawaii Administrative Rules (HAR), Chapter 11-46, "Community Noise Control." A noise permit may be required and should be obtained before the commencement of work. The Indoor & Radiological Health Branch should be contacted at 808 586-4700.

It is strongly recommended that the Standard Comments found at the Department's website: http://hawaii.gov/health/environmental/env-planning/landuse/landuse.html be reviewed, and any comments specifically applicable to this project should be adhered to.

Should you have any questions, please call me at 808 984-8230 or E-mail me at patricia.kitkowski@doh.hawaii.gov.

Sincerely,

Patti Kitkowski

Patti Kitkowski
District Environmental Health Program Chief

c EPO

CHRIS HART
& PARTNERS, INC.
Landscape Architecture
City & Regional Planning

January 9, 2013

Mr. Doug Mayne, Vice Director of Civil Defense
Hawaii State Civil Defense
3949 Diamond Head Road
Honolulu, Hawaii 96816-4495

Dear Mr. Mayne:

Re: **Draft Environmental Assessment** for the Proposed Kahana Sunset Shoreline and Site Improvements at TMK: (2) 4-3-003:015 Lahaina, Maui, Hawaii. (EA 2012-0002), (SM1 2012-0003), (SSV 2012-0002), (CPA 2012-0003), (CIZ 2012-0007)

Thank you for your October 30, 2012 memorandum in response to the Draft Environmental Assessment (EA) for the subject project.

We acknowledge your statement that the subject parcel is covered by the arc of an existing warning siren.

If you have any further questions, please contact Raymond Cabebe of our office, or me.

Sincerely,

Jordan E. Hart
President
Principal Land Planner

JEH:rrc
attachment

c: Ms. Jacqueline Scheibel
Mr. Keith Meyer
Ms. Karen Dedman
Ms. Karen Krenz

115 N. Market Street, Wailuku, Maui, Hawaii 96793-1717 • Ph 808-242-1955 • Fax 808-242-1956
www.chpmaui.com

2/4/04

DEPT. OF PLANNING
COUNTY OF MAUI
NOV - 2 2012
RECEIVED

AGENCY NAME	State Civil Defense	PHONE	733-4300

COMMENT/RECOMMENDATION BOX			
After review of the documents provided, we find that the proposed parcel is covered by the arc of an existing warning siren. We defer to the appropriate state and federal agencies as to the protection of the coastal environment as well as the cultural, historical, and archeological elements of the property.			
Signed:		Dated:	October 30, 2012
Print Name:	DOUG MAYNE	Title:	Vice Director of Civil Defense
NO COMMENT			
Signed:		Dated:	
Print Name:		Title:	

CHRIS HART
& PARTNERS, INC.
Landscape Architecture
City & Regional Planning

January 9, 2013

Mr. Glenn M. Okimoto, Director
State Department of Transportation
869 Punchbowl Street
Honolulu, Hawaii 96813-5097

Attention: Mr. Garret Smith

Dear Mr. Okimoto:

Re: **Draft Environmental Assessment** for the Proposed Kahana Sunset Shoreline and Site Improvements at TMK: (2) 4-3-003:015 Lahaina, Maui, Hawaii. (EA 2012-0002), (SM1 2012-0003), (SSV 2012-0002), (CPA 2012-0003), (CIZ 2012-0007)

Thank you for your November 9, 2012 letter in response to the Draft Environmental Assessment (EA) for the subject project.

We acknowledge that your Department does not anticipate significant adverse impacts to State transportation facilities.

If you have any further questions, please contact Raymond Cabebe of our office, or me.

Sincerely,

Jordan E. Hart
President
Principal Land Planner

JEH:rrc
attachment

c: Ms. Jacqueline Scheibel
Mr. Keith Meyer
Ms. Karen Dedman
Ms. Karen Krenz

115 N. Market Street, Wailuku, Maui, Hawaii 96793-1717 • Ph 808-242-1955 • Fax 808-242-1956
www.chpmaui.com

13/6403

NEIL ABERCROMBIE
GOVERNOR

GLENN M. OKIMOTO
DIRECTOR

Deputy Directors
JADE T. BUTAY
FORD N. FUCHIGAMI
RANDY GRUNE
JADINE URASAKI

STATE OF HAWAII
DEPARTMENT OF TRANSPORTATION
869 PUNCHBOWL STREET
HONOLULU, HAWAII 96813-5097

IN REPLY REFER TO:

STP 8.1031

DEPT. OF PLANNING
COUNTY OF MAUI

NOV 23 2012

RECEIVED

November 9, 2012

Mr. Clayton I. Yoshida, AICP
Planning Program Administrator
County of Maui
Department of Planning
250 South High Street
Wailuku, Hawaii 96793

Dear Mr. Yoshida:

Subject: Kahana Sunset Shoreline and Site Improvements
Draft Environmental Assessment (EA 2012/00002)
Special Management Area Use Permit (SM1 2012/0003)
Shoreline Setback Variance (SSV 2012/0002)
Community Plan Amendment (CPA 2012/0003)
Change in Zoning (CIZ 2012/0007)
TMK: (2) 4-3-003:015

Thank you for requesting the State Department of Transportation's (DOT) review of the subject project. DOT understands that the applicant proposes to replace a portion of an existing seawall and stair structure to prevent future erosion and undermining.

Given the location and the nature of the project, DOT does not anticipate any significant adverse impacts to the State transportation facilities.

DOT appreciates the opportunity to provide comments. If there are any other questions, please contact Mr. Garrett Smith of the DOT Statewide Transportation Planning Office at telephone number (808) 831-7976.

Very truly yours,

GLENN M. OKIMOTO, Ph.D.
Director of Transportation

CHRIS HART
& PARTNERS, INC.
Landscape Architecture
City & Regional Planning

February 7, 2013

Mr. George P. Young, P.E., Chief
Regulatory Branch
U.S. Army Corps of Engineers, Honolulu District
Fort Shafter, Hawaii 96858-5440

Attention: Mr. Farley K. Watanabe

Dear Mr. Young:

RE: **Draft Environmental Assessment** for the Proposed Kahana Sunset Shoreline and Site Improvements at TMK: (2) 4-3-003:015 Lahaina, Maui, Hawaii. (EA 2012-0002)(SM1 2012-0003)(SSV 2012-0002)(CPA 2012-0003)(CIZ 2012-0007) **POH-2010-00206.**

Thank you for your January 29, 2013 letter in response to the Draft Environmental Assessment (EA) for the subject project.

We acknowledge that you reviewed the subject project pursuant to Section 10 of the Rivers and Harbors Act of 1899 and Section 404 of the Clean Water Act. We also acknowledge that the Corps has determined that a Department of Army (DA) permit for Section 10 and Section 404 activities will not be required for the activities associated with the proposed relocation and reconstruction of the seawall

If you have any further questions, please contact Raymond Cabebe of our office, or me.

Sincerely,

2013-02-07

Jordan E. Hart
President
Land Planner

JEH:rrc
attachment
c: Ms. Jacqueline Scheibel
Mr. Keith Meyer
Ms. Karen Dedman
Ms. Karen Krenz
Mr. James Buika

115 N. Market Street, Wailuku, Maui, Hawaii 96793-1717 • Ph 808-242-1955 • Fax 808-242-1956
www.chpmaui.com

DEPARTMENT OF THE ARMY
U.S. ARMY CORPS OF ENGINEERS, HONOLULU DISTRICT
FORT SHAFTER, HAWAII 96858-5440

REPLY TO
ATTENTION OF:

January 29, 2013

Regulatory Branch

File Number **POH-2010-00206**

Clayton I. Yoshida, AICP
Planning Program Administrator
Department of Planning
County of Maui
250 South High Street
Wailuku, HI 96793

Dear Mr. Yoshida:

This responds to your request for written comments for the Final Environmental Assessment (FEA) which address activities and impacts for a proposed shoreline and erosion mitigation and bank stabilization project. The location of the proposed project is at 4909 Lower Honoapiilani Road, Alaeloa, Lahaina, Maui on the parcel identified as TMK 243003015.

The FEA for the proposed seawall repair project was reviewed pursuant to Section 10 of the Rivers and Harbors Act of 1899 (Section 10) and Section 404 of the Clean Water Act (Section 404). Section 10 requires that a Department of Army (DA) permit be obtained for certain structures or work in or affecting navigable waters of the United States (U.S.), prior to conducting the work (33 U.S.C. 403). Navigable waters of the U.S. are those waters subject to the ebb and flow of the tide shoreward to the mean high water mark, and/or other waters identified as navigable by the Honolulu District. In addition, a Section 10 permit is required for structures or work outside this limit if they affect the course, location, or condition of the waterbody as to its navigable capacity.

Section 404 requires that a DA permit be obtained for the placement or discharge of dredged and/or fill material into waters of the U.S., including wetlands, prior to conducting the work (33 U.S.C. 1344). The area of Corps jurisdiction under Section 404 extends to the Mean High Tide Line (MHTL) for navigable waters like the Pacific Ocean, and to the upland boundary of any adjacent wetlands.

The information presented indicates that the work proposed at the sea wall location will be above, and shoreward of the Pacific Ocean, a navigable water of the U.S. The alternatives to accomplish the work has been considered and sufficient detail has been disclosed about the specific methods of construction and associated mitigative measures to ensure that in-water activities will not occur.

The Corps has therefore determined that a DA permit for Section 10 and Section 404 activities will not be required for those activities associated with the proposed re-location and reconstruction of the seawall project.

Thank you for your consideration of potential impacts to the aquatic environment of the Lahaina watershed. Please contact Mr. Farley Watanabe of my staff at 808-835-4305, facsimile 808-835-4126, or by email at Farley.K.Watanabe@usace.army.mil if you have any questions or need additional information. Please refer to File Number **POH-2010-00206** in any future correspondence with us.

Sincerely,

George P. Young, P.E.
Chief, Regulatory Branch

Copy furnished:
John Nakagawa, Office of Planning, CZM Program via e-mail at<JNakagaw@dbedt.hawaii.gov>
Darryl Lum, Chief, Clean Water Branch, State DOH via e-mail at <darryl.lum@doh.hawaii.gov>
Raymond Cabebe, Chris Hart & Partners, Inc. via e-mail at <RCabebe@chpmaui.com>

CHRIS HART
& PARTNERS, INC.
Landscape Architecture
City & Regional Planning

January 9, 2013

Mr. Ray Okazaki, Engineering Supervisor
Maui Electric Company
P.O. Box 398
Kahului, Hawaii 96732-6898

Attention: Ms. Kelcie Kawamura

Dear Mr. Okazaki:

Re: **Draft Environmental Assessment** for the Proposed Kahana Sunset Shoreline and Site Improvements at TMK: (2) 4-3-003:015 Lahaina, Maui, Hawaii. (EA 2012-0002), (SM1 2012-0003), (SSV 2012-0002), (CPA 2012-0003), (CIZ 2012-0007)

Thank you for your October 9, 2012 letter in response to the Draft Environmental Assessment (EA) for the subject project.

When appropriate, Kahana Sunset will submit survey and civil plans to verify the project's location requirements and to address any necessary relocation or conversion of your facilities.

If you have any further questions, please contact Raymond Cabebe of our office, or me.

Sincerely yours,

JORDAN 5/1/12

Jordan E. Hart, President
Principal Land Planner

JEH:rrc
attachment

c: Ms. Jacqueline Scheibel
Mr. Keith Meyer
Ms. Karen Dedman
Ms. Karen Krenz

115 N. Market Street, Wailuku, Maui, Hawaii 96793-1717 • Ph 808-242-1955 • Fax 808-242-1956
www.chpmaui.com

Maui Electric Company, Ltd.•210 West Kamehameha Avenue•P. O. Box 398•Kahului, Maui, HI 96733-0698•(808) 871-8461

October 9, 2012

'12 OCT 12 AM 10:57

Mr. Clayton Yoshida, AICP
Planning Program Administrator
County of Maui – Department of Planning
250 South High Street
Wailuku, Hawaii 96793

Subject: Draft Environmental Assessment (EA) for Kahana Sunset Shoreline and Site Improvements
Tax Map Key: (2) 4-3-003:015
4909 Lower Honoapiilani Road, Lahaina, Maui, Hawaii

Dear Mr. Yoshida,

Thank you for allowing us to comment on the Draft Environmental Assessment for the subject project.

In reviewing our records and the information received, Maui Electric Company (MECO) may have facilities within the project area. We highly encourage the customer to submit survey and civil plans to us as soon as practical to verify the project's location requirements and address any possible relocations or conversions of our facilities.

Should you have any questions or concerns, please feel free to contact Kelcie Kawamura at 872-3246.

Sincerely,

Ray Okazaki
Supervisor, Engineering

CHRIS HART
& PARTNERS, INC.
Landscape Architecture
City & Regional Planning

March 21, 2013

Mr. Harry C. Duckworth
21 Ki Ohu Ohu Lane #3
Lahaina, Hawaii 96761

Dear Mr. Duckworth:

Re: **Draft Environmental Assessment** for the Proposed Kahana Sunset Shoreline and Site Improvements at TMK: (2) 4-3-003:015 Lahaina, Maui, Hawaii. (EA 2012-0002), (SM1 2012-0003), (SSV 2012-0002), (CPA 2012-0003), (CIZ 2012-0007)

Thank you for your letter on March 8, 2013 providing comments in response to the Draft Environmental Assessment (EA) for the subject project.

Kahana Sunset was constructed in 1971 as an apartment-condominium project on residential zoned property by way of a variance granted in 1968. In 1971, short term rental ("transient vacation rentals" or "TVR") use was permitted in the apartment district. The County of Maui now wishes to have the use on the property consistent with the zoning. Since TVR use has not been allowed within apartment zoning since 1991, hotel is the most appropriate zone for the existing use.

The owners of Kahana Sunset are not intending to expand the number of units nor are they intending to build anything higher than what is there presently. The Maui Planning Commission has recommended that a height limit of three-stories be maintained for the property and Kahana Sunset has agreed. It is expected that the three-story height limit will be a condition of the proposed zoning. As such, with the proposed zoning change, the community will basically remain as is with no additional impacts to views or traffic.

We appreciate your support of the seawall and drainage improvements on the property. Please note: These are the only scopes of work proposed for this application.

Please forward this letter to the other concerned parties on your letter who did not provide an address. If you have any further questions, please contact Raymond Cabebe of our office, or me.

115 N. Market Street, Wailuku, Maui, Hawaii 96793-1717 • Ph 808-242-1955 • Fax 808-242-1956
www.chpmaui.com

Sincerely yours,

Jordan E. Hart, President
Land Planner

JEH:rrc
attachment

c: Ms. Jacqueline Scheibel
Mr. Keith Meyer
Ms. Karen Dedman
Ms. Karen Krenz
Mr. Jim Buika, Planning Deparment
Addressees on letter

12/13 20

DEPT. OF PLANNING
COUNTY OF MAUI

MAR - 7 2013

RECEIVED

Maui Planning Commission
Department of Planning
250 S. High St.
Wailuku, HI 96793
Attention: Planning Director Will Spence

Regarding: Kahana Sunset Apartments

The Kahana Sunset complex is located in Napili, which is basically a residential community. Its residents have enjoyed their ocean views for decades. If the Kahana Sunset is allowed to change its current residential zoning to that of a hotel zone, there is the possibility that a large high rise hotel could be built on the property. This could adversely affect our community. Added traffic congestion on a road that has trouble handling trucks, buses, cars and pedestrians would be horrendous. Kahana Sunset is located in an area of very limited sight distances. A very dangerous curve with no shoulders makes it difficult for vehicles and pedestrians to use the same space. Those that live above the lower road would lose their precious ocean views.

The Kahana Sunset has existed since 1971, zoned residential. Let's keep our community as is. The current seawall can be upgraded as well as the drainage. Those that now live in the complex deserve the upgrade, but not the rezoning.

Please keep the area zoned residential.

Sincerely,

Harry C. Duckworth
21 KiOhuOhu Lane#3
Lahaina, HI 96761

Cooper D. Winn
COOPER D. WINN
37 POLOHINA LANE #6
Lahaina, HI 96761

Jim Crebbon
JIM CREBBON
141 'A HUI RD F
LAHAINA, MAUI 96761

Nathaniel Hunt

Turner E. Adee
Laurie Oki

Kevin Sampson

Robert A. Rogers
16 POLOHINA #4

Tom Corrigan
5095 Napilihau St. pmb #322
Napili, HI 96761

Charles Rocco

Linda S. Winn
LINDA S. WINN
37 Polohina Lane, Apt. 6
Lahaina, HI 96761

Michael Rizzer
Robert H. Seeber

Peri Toohey

Don Juey

Jay Mammel

Pam Cohn
82 HO'OLAPA ST
96753

Larry Lee

Morris Jamesby

Charlotte Rangeda

George Wahler

Kahu Chong

Diane Rice

Page 1)

Maui Planning Commission
Department of Planning
250 S. High St.
Wailuku, HI 96793
Attention: Planning Director Will Spence

Regarding: Kahana Sunset Apartments

The Kahana Sunset complex is located in Napili, which is basically a residential community. Its residents have enjoyed their ocean views for decades. If the Kahana Sunset is allowed to change its current residential zoning to that of a hotel zone, there is the possibility that a large high rise hotel could be built on the property. This could adversely affect our community. Added traffic congestion on a road that has trouble handling trucks, buses, cars and pedestrians would be horrendous. Kahana Sunset is located in an area of very limited sight distances. A very dangerous curve with no shoulders makes it difficult for vehicles and pedestrians to use the same space. Those that live above the lower road would lose their precious ocean views.

The Kahana Sunset has existed since 1971, zoned residential. Let's keep our community as is. The current seawall can be upgraded as well as the drainage. Those that now live in the complex deserve the upgrade, but not the rezoning.

Please keep the area zoned residential.

Sincerely,

Harry C. Duckworth
21 KiOhuOhu Lane#3
Lahaina, HI 96761

Name	Address
TERRIS L. PENNINGTON	107 PUNOHU LN #2 LAHAINA 96761
LARRY KUOLATY	38 POLOHINA LN #8 96761
Lois Bernel	38 Polohina Lane #8 96761
Rebecca Hanken	49 Polohina Lane #12-2 96761.
Hugo DIAZ	8 Polohina Ln #7 96761
Annette Eberlien,	133 Punohu Lane #6, Lahaina, HI 96761

NAPILI VILLAS

ONE OF WEST MAUI'S FINEST NEIGHBORHOODS

Aloha & Welcome Current Listings Napili Villas Community Contact Bev Will

Aloha & Welcome

One of West Maui's finest neighborhoods

Located just South of the Kapalua Resort (a five minute drive down Honoapiilani Hwy.) and nestled above the "Lower Road," you'll discover Napili Villas.

Napili Villas is also West Maui's "Cool" Neighborhood

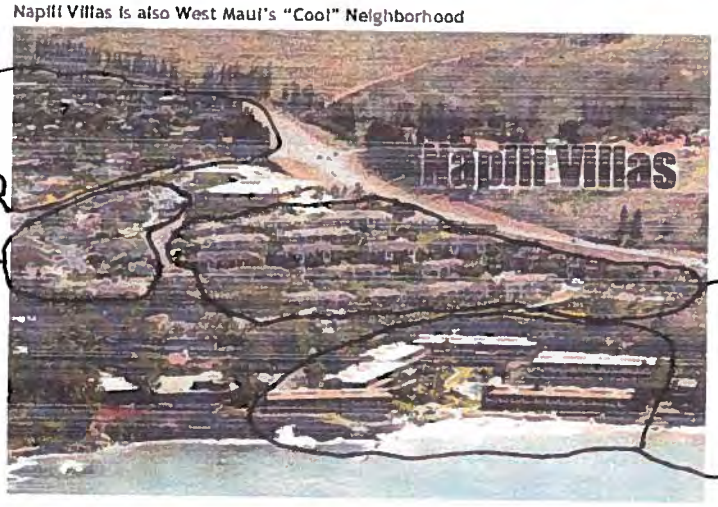

This residential condominium community is cool. We've labeled it "cool" because the wonderful trade winds waft through our neighborhood most every day. We can keep our windows open and our air conditioners off. And, many evenings we enjoy a gentle rain—it smells so good. I know I live here.

During your search for a home, consider Napili Villas. The floorplans are well designed, the parking is reserved (TWO for EACH condominium), and we're spread out over 12 acres, including a great park for your enjoyment.

I invite you to explore this website and if you have any questions about our 'hood,' simply send me an email – bev@bevwill.com or give me a call at 808 268.0770. I'm a REALTOR®(Broker) with Aloha Realty Group and have represented many buyers and sellers in this great neighborhood. I would be honored to represent you!

Napili Villas

- 184 condominiums
- 26 buildings
- Low-density - only 2 stories
- 8 units per building; 6 buildings with 4 units
- Completed in 2002
- Double-pane vinyl sliding doors and windows
- Lanais on all ground floor units
- Lanai/balcony on second floor units
- 2 reserved parking spaces
- Pets allowed
- Manicured Park on property

APPENDIX M

Maui Planning Commission Comments & Response

CHRIS HART & PARTNERS, INC.
Landscape Architecture
City & Regional Planning

DEPT OF PLANNING
COUNTY OF MAUI
RECEIVED

'13 MAY 21 A11 :10

May 20, 2013

Mr. William Spence, Director
Planning Department
250 South High Street
Wailuku, Hawaii 96793

Attention: Mr. James Buika

Dear Mr. Spence:

RE: Draft Environmental Assessment in support of Applications for Special Management Area (SMA) Use Permit, Shoreline Setback Variance (SSV), Community Plan Amendment (CPA) and Change in Zoning (CIZ) for the Kahana Sunset Shoreline and Site Improvements at TMK: (2) 4-3-003:015 Alaeloa, Lahaina, Maui, Hawaii.

Thank you for your March 25, 2013 letter based on discussions on the Draft Environmental Assessment (EA) for subject project at the regular meeting of the Maui Planning Commission on February 26, 2013. We offer the following responses to the items as enumerated in your letter:

1. Kahana Sunset has explored the possibility of designating public beach parking on its property. However, because the entrance to the proposed beach access is at Lower Honoapiilani Road, parking within the Kahana Sunset property would not be logistically practical. Existing parking stalls are approximately sixteen feet lower than the elevation at the road and beachgoers would not likely to be inclined to walk back up to the road to the beach access. In addition, at 1.2 stalls per unit, Kahana Sunset does not have any excess stalls to dedicate to beach parking. There is an approximately ten-foot wide shoulder on the mauka side of Lower Honoapiilani Road that would allow for safe on-street parking for several cars. This situation would be similar to Napili Bay to the north and other areas where beach access is provided with only on-street parking available.

   NOTE: Maui County Code (MCC) Chapter 10.48.040 Section B.27 prohibits parking "on the makai side of Lower Honoapiilani Road from its intersection with Kaanapali Shores Drive to Honokowai to its intersection with Kapalua Place in Kapalua" (including the Kahana Sunset frontage). Amending this section of the county code would provide a resolution to the beach access

115 N. Market Street, Wailuku, Maui, Hawaii 96793-1717 • Ph 808-242-1955 • Fax 808-242-1956
www.chpmaui.com

parking issue. Future development of the vacant parcel across Lower Honoapiilani Road may also provide an opportunity to acquire a more appropriate location for off-street beach access parking.

2. Kahana Sunset will have a licensed engineer prepare a report to illustrate and document the upstream origins and estimated flows of stormwater.
3. We are aware of some upstream sources that may be equipped with filtering systems, however their effectiveness is unknown and there are no known treatment systems. As noted in the Draft EA, Kahana Sunset will be installing filters at onsite drainage inlets to minimize the flow of pollutants into the ocean.
4. The following table compares the possible zoning designations beginning with the lowest density of A-1 Apartment District to the highest density of H-2 Hotel District.

Zoning Comparison Table						
	Kahana Sunset	**A-1**	**A-2**	**H-1**	**H-M**	**H-2**
Transient Vacation Use	**Yes**	Not Allowed	Not Allowed	Allowed	Allowed	Allowed
Height (max. stories)	**3**	2	4	2	6	12
Floor Area-Lot Area Ratio (max.)	**40%**	40%	90%	50%	100%	150%
Lot Coverage (max.)	**22%**	25%	35%	25%	30%	35%
Parking Ratio	**1.2 stalls/ unit**	2 stalls/ unit	2 stalls/ unit	1 stall/ 2 units	1 stall/ 2 units	1 stall/ 2 units

Table 1

Underlined: Meets regulation.

As shown above, the lowest density zoning designation that meets all of the criteria for the zoning district is H-M Hotel District.

NOTE: The Applicant has indicated that they are open to a condition of Zoning establishing a three-story height limit, in line with the existing building configurations. It should also be noted that no expansion of the existing residential component of the project is proposed; and that any future proposal would trigger the requirement for an SMA Major Permit.

5. There are no additional parking requirements triggered by the proposed action. Kahana Sunset complies with current parking requirements in the context of the variance granted in 1968 ("one parking stall for every two units"). As noted in Table No. 1 above, Kahana Sunset's existing configuration will also comply with the requirements of the proposed H-M Hotel District zoning.

6. An application for shoreline certification, based on a survey conducted by Valencia Land Surveying on July 1, 2011, was accepted for processing by the Department of Land & Natural Resources (DLNR) on October 23, 2011. This survey identified three areas of encroachment totaling approximately 609 square feet. On December 5, 2011, the Survey Division of the State Department of Accounting and General Services (DAGS) revised the location of the shoreline which resulted in approximately 3,195 square feet of encroachments. The proposed project will remove approximately 621 square feet of the alleged encroachment leaving approximately 2,574 square feet to be resolved by obtaining an easement from the State. Be advised that these are preliminary numbers and are subject to review and approval by the State.

7. Kahana Sunset has considered the possibility of allowing the public to use the outdoor shower that will be relocated further inland. The shower is proposed to be located approximately 200 feet from the public beach access point which would not allow for convenient access. As such, and due to security and liability concerns, Kahana Sunset does not wish to allow public access to the outdoor shower. Kahana Sunset is proposing to dedicate access to the beach, through its property, at Keonenui Bay where none currently exists, for recreational purposes. The beach access path will be approximately 250 feet long with an area of approximately 1,250 square feet, and will fulfill one of the primary objectives of Hawaii Revised Statutes (HRS) 205A, "providing and managing adequate public access … to and along shorelines with recreational value."

   NOTE: Under the current proposal Kahana Sunset is providing a Public Beach Access path with significant functional and monetary value to the community.

Tax Assessed Value of Parcel	Total Parcel SQFT	RPT Parcel Value per SQFT	Access Path SQFT	RPT Value of Access Path
$ 30,121,300.00	194,583	$ 154.80	1,250	$ 193,500.00

8. Wherever outdoor lighting is needed or required, Kahana Sunset will comply with Maui County Code (MCC) Chapter 20.35 regarding the proper shielding of outdoor lighting fixtures.

9. Any revisions to the Draft EA will be highlighted in the Final EA as requested.

If you have any further questions, please call Raymond Cabebe of our office, or me.

Sincerely,

Jordan E. Hart
President
Land Planner

Enclosures
c: Mr. Keith Meyer
Ms. Jacqueline Scheibel
Ms. Karen Dedman
Ms. Karen Krenz
Mr. Ken Gadicke

ALAN M. ARAKAWA
Mayor

WILLIAM R. SPENCE
Director

MICHELE CHOUTEAU McLEAN
Deputy Director

COUNTY OF MAUI

DEPARTMENT OF PLANNING

March 25, 2013

Mr. Raymond Cabebe
Chris Hart & Partners, Inc.
115 North Market Street
Wailuku, Hawaii 96793

Dear Mr. Cabebe:

SUBJECT: COMMENTS FROM THE MAUI PLANNING COMMISSION (COMMISSION) ON THE DRAFT ENVIRONMENTAL ASSESSMENT (EA) PREPARED IN SUPPORT OF THE PROPOSED KAHANA SUNSET AOAO SHORELINE & SITE IMPROVEMENTS, LOCATED AT 4909 LOWER HONOAPIILANI ROAD, LAHAINA, MAUI, HAWAII; TMK: (2) 4-3-003:015 (CPA 2012/0003) (CIZ 2012/0007) (SM1 2012/0003) (SSV 2012/0002) (EA 2012/0002)

At its regular meeting on February 26, 2013, the Commission reviewed the Draft EA, dated "July, 2012" for the above referenced project. Based upon those discussions and questions to the Applicant and Applicant's representatives, the Commission's nine (9) requests for additional information are listed below. Please include information on the following questions and topics in the Final EA:

1) Explore the possibility of designating public beach parking;

2) Explore the origins and amounts of water volume that are released directly into the ocean through the drain outfall;

3) For the water being released into the ocean, attempt to document any existing upstream treatment of water for anticipated pollution;

4) Explore if there exists a lower density zoning that fits the existing use of the property that will further limit the expansion, especially vertically, of the project. In other words, as part of the project, explore possible lesser zoning changes than the proposed H-M Zoning which allows for six-story tall hotel structures, as the appropriate zoning change. In addition, consider a three-story height limit as part of the Special Management Area Use Permit and Change in Zoning (CIZ) as a condition of project approval;

5) Confirm the parking requirements for the proposed CIZ to ensure parking requirement compliance with any CIZ;

250 SOUTH HIGH STREET, WAILUKU, MAUI, HAWAII 96793
MAIN LINE (808) 270-7735; FACSIMILE (808) 270-7634
CURRENT DIVISION (808) 270-8205; LONG RANGE DIVISION (808) 270-7214; ZONING DIVISION (808) 270-7253

6) Regarding the acknowledged encroachments on to state lands, explain the existing encroachments and the process planned to eliminate the existing encroachments. Conduct a resurvey of the property at the encroachments, if necessary, to fully understand the limits of the encroachments;

7) Consider allowing the public to use the relocated shower as a public amenity;

8) Verify that the project alternatives comply with County ordinance with respect to down lighting. Ordinance No. 3430, Bill No. 85, "A Bill for an Ordinance Amending Section 2.40.030, Repealing Chapter 12.17, and Amending Title 20, Maui County Code, Relating to Outdoor Lighting Standards" dated January 25, 2007; and

9) In the Final EA, please flag the responses and changes created from the Draft EA to the Final EA, for easier reading and review.

Thank you for your cooperation. If additional clarification is required, please contact Coastal Resources Planner James Buika at james.buika@mauicounty.gov or at (808)270-6271.

Sincerely,

WILLIAM SPENCE
Planning Director

xc: Michele Chouteau McLean, Deputy Planning Director (PDF)
Clayton I. Yoshida, AICP, Planning Program Administrator (PDF)
Joseph W. Alueta, Acting Planning Program Administrator (PDF)
James A. Buika, Coastal Resources Planner (PDF)
Tara Miller, University of Hawaii Sea Grant Extension Program (PDF)
Maui Planning Commissioners
Rowena Dagdag-Andaya, Deputy Public Works Director (PDF)
Samuel J. Lemmo, Department of Land and Natural Resources-Office of Conservation and Coastal Lands (PDF)
Daniel L. Ornellas, Department of Land and Natural Resources-Land Division, Maui (PDF)
Project File
General File

WRS:JAB:cr
K:\WP_DOCS\PLANNING\EA\2012\0002_KahanaSunset\MPC DEA\Draft EA Comments, MPC, vFINAL, 03 09.13 doc

APPENDIX N
Community Informational Meeting

CHRIS HART & PARTNERS

MEMORANDUM

To: File
Date: July 16, 2013
Subject: Neighborhood Informational Meeting at Kahana Sunset

Purpose:
This meeting was encouraged by the Maui County Planning Department by letter dated March 25, 2013 to inform the neighbors of the improvements proposed by the Kahana Sunset AOAO to its property.

Mail Out & Responses:
A letter, dated May 30, 2013, was mailed to all neighboring property owners (233) within 500 feet inviting them to a presentation at the Keonenui Room at the Kahana Sunset from 12 Noon to 2:00 PM on Tuesday, July 16, 2013. The letter summarized the proposed actions. Owners were encouraged to submit written questions ahead of time so responses could be prepared and addressed at the meeting. Two owners responded by email and their questions were addressed by email. The questions covered the change in zoning, the beach access path, the drainage improvements, and the replacement seawall. There were two phone calls received by Chris Hart & Partners regarding the scope of the work that were addressed verbally. The callers seemed satisfied with the answers.

Informational Meeting:
The meeting was hosted by the co-chairs of the Kahana Sunset Long Range Planning Committee, Ms. Jacqueline Scheibel and Mr. Keith Meyer, along with Board Treasurer Mr. Ken Gadicke and Resident Manager Ms. Karen Krenz. Mr. Jordan Hart and Mr. Raymond Cabebe from Chris Hart & Partners, Inc., planning consultants for Kahana Sunset, were also there.

There were five (5) attendees: Mr. Glenn Kamaka, Mr. John Rogers, and Mr. Clay Smith represented the Door of Faith Church. Mr. Steve Moses is a property owner on Hui Road F and Ms. Janet Bacon is an employee at Kahana Sunset.

Mr. Keith Meyer conducted a slide presentation that covered the background, proposed improvements, the permit processing required to authorize the improvements, and a tentative schedule. After the presentation, the floor was opened for questions and comments. The Door of Faith representatives were particularly interested in the neighborhood beach access path and were happy that Kahana Sunset was proposing to construct it as they are long time residents of the area. A question was posed about parking for beach access. The response was that there is no available or convenient parking onsite. Street parking on Lower Honoapiilani Road is available, but is technically not legal. The County has been approached about revising the ordinance to allow for parking on the road. There are other beach access paths that only have street parking. Future planned improvements to the road could include street parking.

The group was led around the property to see where the improvements would occur. The mood was generally supportive with positive comments and no objections voiced.

CHRIS HART
& PARTNERS, INC.
Landscape Architecture
City & Regional Planning

May 30, 2013

Neighboring Property Owner

SUBJECT: Community Informational Meeting for the Kahana Sunset Environmental Assessment (EA) - For Shoreline & Site Improvements on the property situated at 4909 Lower Honoapiilani Road, Alaeloa, Lahaina, Maui, TMK (2) 4-3-003:015 (approximately 4.46 acres)

Dear Neighbor:

On behalf of the Kahana Sunset AOAO, we are cordially inviting you to a Community Informational Meeting at the Keonenui Room on the Kahana Sunset property between **12:00 PM to 2:00 PM** on **Tuesday, July 16, 2013**.

Kahana Sunset has applied to the County of Maui for permits in connection with shoreline and site improvements and would like to share its plans with you (**See Attached:** *Regional Location Map and Tax Map*).

The proposed project is necessary to construct permanent erosion mitigation and bank stabilization measures to correct an ongoing pattern of erosion along the shoreline. Two habitable structures are being threatened, which poses a potential risk to public safety as well as the potential for damage to the nearshore environment.

The proposed work involves the following actions:

1. Removal of the existing failing seawall and replacement with a structurally engineered retaining seawall *mauka* of the shoreline. The proposed seawall will be relocated approximately ten (10) feet *mauka* of the existing seawall which is anticipated to increase the size of the existing sandy beach. The proposed seawall is also anticipated to stabilize the shoreline, prevent further erosion and related damage.
2. Replacement of approximately 300 feet of existing 36-inch stormwater drain line that discharges into the ocean fronting Kahana Sunset. During severe storms, this drain line discharges approximately 64 cubic feet of stormwater per second (cfs).

115 N. Market Street, Wailuku, Maui, Hawaii 96793-1717 * Ph 808-242-1955 * Fax 808-242-1956
www.chpmaui.com

NOTE: Approximately 82% of this outflow arrives at Kahana Sunset from Lower Honoapiilani Road and upland developments.

3. Landscape plantings will also be renovated to include drought tolerant and native plantings.
4. A neighborhood beach access path will be provided on Kahana Sunset property along its southern boundary from Lower Honoapiilani Road to he ocean. The proposed path will be constructed with compacted gravel and will be gated at both ends.

Background:

Special Management Area (SMA) Emergency Permits were approved by the County of Maui, Department of Planning in 2009 and 2010, allowing the Applicant to expedite emergency construction of urgent mitigation measures after the collapse of Building F's lanai which seriously threatened its foundation and the threatened damage to Building A. The State Department of Land and Natural Resources (DLNR), Office of Coastal and Conservation Lands, has also been consulted and is party to ongoing coordination amongst Kahana Sunset, the State, and the County.

The project site is located in the State *Urban* District, is designated for *Single Family Residential* use by the West Maui Community Plan, and is Maui County zoned *R-3 Residential*. Kahana Sunset was built with proper permits in 1971 under a variance granted by the County of Maui.

In order to correct the Single Family Residential land use discrepancy, Kahana Sunset has submitted requests for a County Change in Zoning (CIZ) to *H-M Hotel* and a Community Plan Amendment (CPA) to *Hotel*. These changes will bring the land use entitlements into consistency with the existing and historical use of the property as a resort condominium. Kahana Sunset is classified as "Hotel & Resort" by the Maui County Real Property Tax Division and has been paying the associated tax rate. The goal of the CIZ and CPA, as "housekeeping" actions, is to establish permanent Land Use consistency and conformity with the existing and permitted use.

NOTE: There are no plans to expand or enlarge existing buildings or to increase the number of units on site.

Because the project site is located in the Special Management Area (SMA) and the proposed action is in the Shoreline Area, the project involves an application for SMA Use Permit in accordance with Chapter 205A, Hawaii Revised Statutes (HRS), as well as a HRS Chapter 343 Environmental Assessment (EA) and a Shoreline Setback Variance (SSV).

If you have any questions or concerns, please plan to attend this Community Informational Meeting where a presentation of Kahana Sunset's plans will be shared

and an opportunity will be provided to have your questions answered or concerns recorded. Light refreshments will also be provided.

To insure that consultants are able to provide requested information, please submit all **questions in writing** to our office by **June 28, 2013**. You may mail your questions to the address on the first page of this letter, email to rcabebe@chpmaui.com, or fax to (808) 242-1956. Should you require additional information, please call Raymond Cabebe or me at (808) 242-1955.

Respectfully,

Jordan E. Hart, President
Land Planner

Enclosures

c: Kahana Sunset

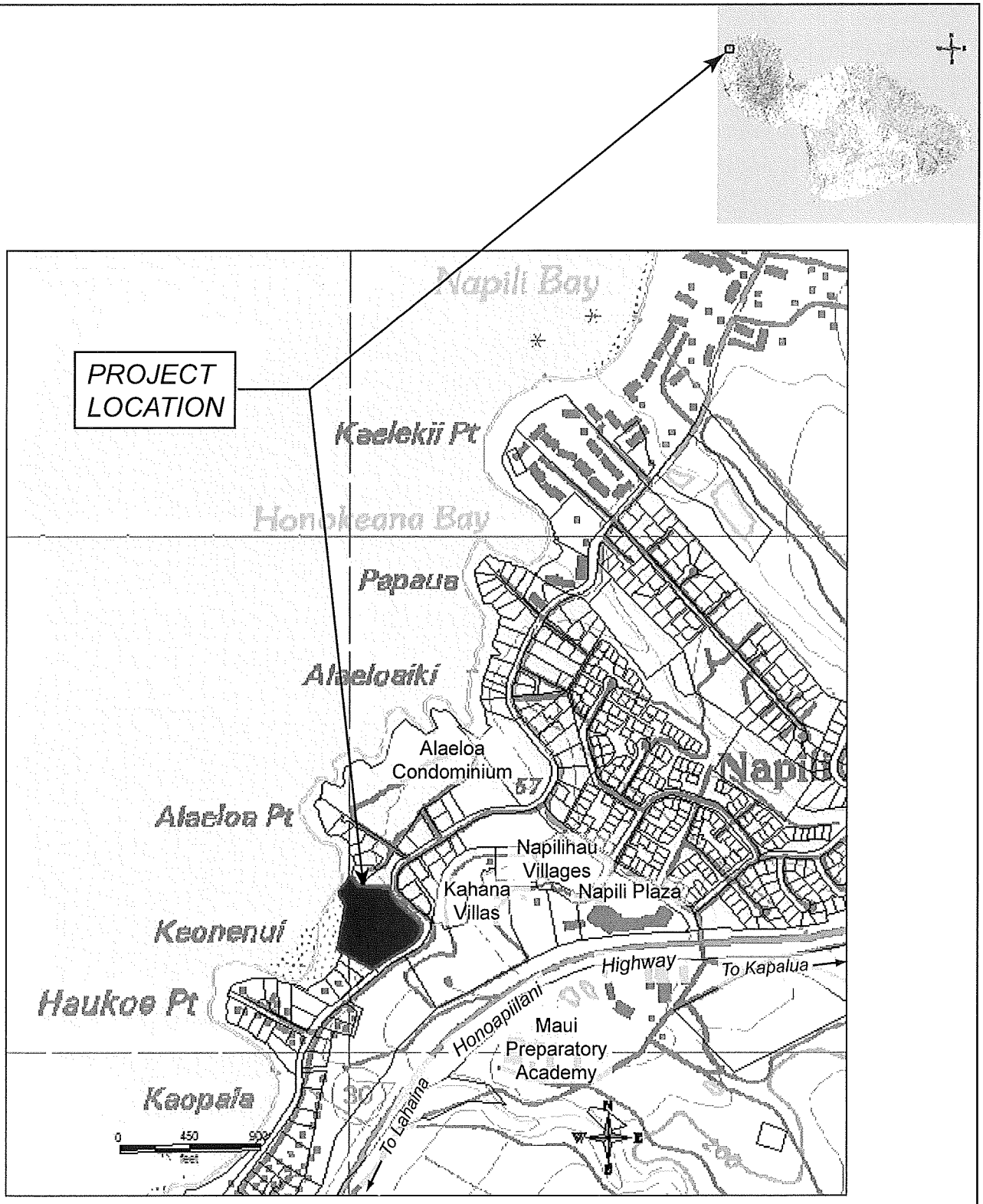

TMK: (2) 4-3-003:015
4909 Lower Honoapiilani Road
Lahaina, Maui, Hawaii

KAHANA SUNSET

CHRIS HART & PARTNERS, INC.

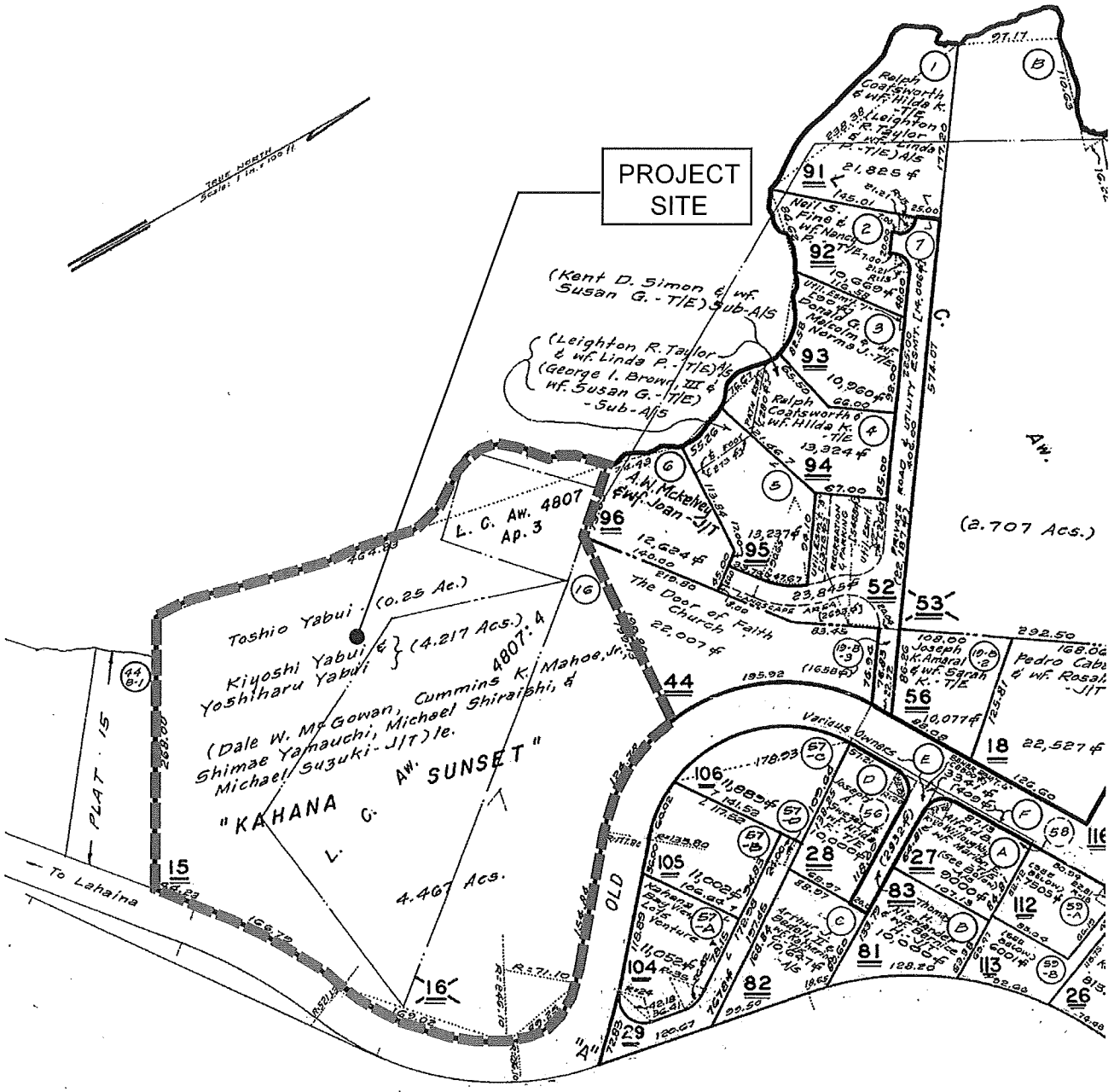

DEPARTMENT OF TAXATION PROPERTY TECHNICAL OFFICE TAX MAPS BRANCH STATE OF HAWAII TAX MAP		
SECOND TAXATION DISTRICT		
ZONE	SEC.	PLAT
4	3	03

Parcel 15
Not to Scale

TAX MAP

KAHANA SUNSET

CHRIS HART & PARTNERS, INC.

Raymond Cabebe

From: Raymond Cabebe
Sent: Wednesday, June 12, 2013 8:14 AM
To: 'Kent Simon'
Subject: RE: Kahana Sunset

Mr. Simon,

Thank you for submitting your question regarding the Change in Zoning for the Kahana Sunset Resort property.

In regards to your concern, Kahana Sunset did explore all zoning options, including A-2 Apartment zoning. When Kahana Sunset was constructed in 1971, vacation or short-term rentals were allowed in the Apartment District, unlike the current County code which only allows for long-term rentals. As such, a Hotel designation is Kahana Sunset's only option in order continue the existing vacation rental use that has been in place since 1971. H-M Hotel zoning was selected over H-1 (2-story maximum) because of the existing 3-story structures.

At its review of the Draft Environmental Assessment, the Maui Planning Commission expressed its intention of imposing a 3-story height limit, in line with the existing building configurations, so that should allay your fear of a dramatic increase in density and height. In addition, since the property is within the Special Management Area (SMA), any future re-development would be subject to a public hearing and require approval by the Maui Planning Commission.

We hope this addresses your concern. If you have any additional questions, please feel free to email or call.

Regards,

R. Raymond Cabebe, LEED® AP BD+C
Land Planner
CHRIS HART & PARTNERS, INC.
115 N. Market Street
Wailuku, Maui, Hawaii 96793
voice: 808.242.1955 x556
facsimile: 808.242.1956
direct: 808.270.1556
www.chpmaui.com

From: Kent Simon [mailto:sueandkent@msn.com]
Sent: Wednesday, June 05, 2013 8:19 AM
To: Raymond Cabebe

Subject: Kahana Sunset

Dear Sirs- 3 June, 2013

I question the reasoning of change of zoning to H-M Hotel, which allows for 6 stories, as opposed to Apartment-2 (A-2) which allows for 4 stories, and would presumably cover the existing buildings and their use.
Although your letter of 30 May, 2013 explains "no plans to expand or enlarge", my fear is that with H-M Hotel zoning, the property with its 42 year old structures could be developed into a hotel resort of 6 stories and much larger use density.
The neighborhood (including me) is R-3 Residential, and a H-M Hotel right in the middle would be unacceptable "spot" zoning.
I think Kahana Sunset could justify zoning change to existing use, but question going beyond that to allow H-M Hotel zoning which would allow drastically increased density and height, and endanger the existing neighborhood ambiance.

Respectfully,
Kent Simon
29 Hale Malia Place
Lahaina, 96761
TMK: 4-3-3:94

Raymond Cabebe

From: Raymond Cabebe
Sent: Thursday, June 27, 2013 12:33 PM
To: 'pquigley@clublespri.com'
Cc: 'repbis2@yahoo.com'; Jacque Scheibel; Keith Meyer; Ken Gadicke (k.gadicke@gadminca.com); Jordan Hart
Subject: Kahana Sunset Master Plan
Attachments: image001.jpg

Mr. Quigley,
Thank you for submitting your questions regarding the Kahana Sunset proposal for shoreline and site improvements.
We offer the following responses to your questions as enumerated in your June 5, 2013 email:

1. Jacqueline Scheibel, Keith Meyer, Ken Gadicke, Karen Krenz and Karen Dedman will be attending the meeting hosted by Kahana Sunset (KS). This meeting is in response to a County Planning Department comment on the Draft Environmental Assessment (EA) that recommended an informational meeting with the neighbors. No one from the County will be present, however the meeting proceedings will be reported in the Final EA.
2. The entire seawall, from its connection to the Building A seawall to and including the stairs, will be replaced. Overlaying the proposed plan over an old site plan reveals that the old pool location lies just mauka of the top of the new stairway to the beach. There are plantings and lawn in the area. If any pool remnants are encountered, they will be removed and filled with soil.
3. KS intends to fund the replacement drain line in order to retain control over it. Due to its 40 year life expectancy, the pipe has developed leaks. KS has decided to take preemptive action before it develops into a more serious problem.
4. The beach access will be constructed by KS entirely on KS property. The path will be delineated by a six-foot high fence with a landscape planting buffer. The actual path varies in width between 38 inches and 60 inches. At Building F, it narrows to 42 inches and a concrete stairway will be constructed leading to beach level, about 8 feet below grade.
    a. Liability. The purpose of the Hawaii Recreational Use Statute (HRUS) "is to encourage owners of land to make land and water areas available to the public for recreational purposes by limiting their liability toward persons entering thereon for such purposes." This statute provides a measure of liability protection for land owners. The entire statute (Chapter 520 Hawaii Revised Statutes) can be viewed here: http://codes.lp.findlaw.com/histatutes/3/28/520. KS may consider acquiring additional insurance.
    b. Gates. The gates are proposed to be open between the hours of 9:00 AM and 7:00 PM. KS will maintain control of the gate locks which will be locked for security purposes at all other times.
    c. Security. KS does not anticipate a need for additional security.
    d. Outdoor showers. KS has expressed to the County its preference to not allow

public use of the outdoor showers on KS property.

e. Schweitzers. They are aware of the proposed beach access path and have expressed opposition.

f. Easement. The County is not being given a "permanent" easement, however the proposed path is a "solution" for public beach access required by a previous emergency permit and will most likely become one of the conditions for approval of the permits required for the seawall project. KS retains ownership and it is expected that the County will require that a unilateral hold-harmless agreement be executed and recorded to memorialize this condition.

We hope this addresses your concerns. If you have any additional questions, please feel free to email or call.

Regards,

R. Raymond Cabebe, LEED® AP BD+C
Land Planner

CHRIS HART & PARTNERS, INC.
LANDSCAPE ARCHITECTURE
CITY & REGIONAL PLANNING

115 N. Market Street
Wailuku, Maui, Hawaii 96793
voice: 808.242.1955 x556
facsimile: 808.242.1956
direct: 808.270.1556
www.chpmaui.com

For use only as explicitly authorized by Chris Hart & Partners, Inc. Unauthorized duplication in any form or distribution is expressly forbidden. Any use shall be verified with hardcopy forms of same. The contents of this media are for the exclusive use of the recipient and any specifically designated consultants. This media shall be considered as a record of the data originally provided by Chris Hart & Partners, Inc. and shall remain in its original form without any modifications whatsoever. No warranty, expressed or implied, is made of any subsequent form or use of the data contained on this media. Any subsequent uses or adaptation beyond the specific purpose intended or without verification from Chris Hart & Partners, Inc. shall be solely at the users own risk and full legal responsibility.

Warren Bisbee
repbis2@Yahoo.com
Phone: (916)408-0240
Fax: (916) 408-0250
Cell Phone: (916) 672-7253

From: Patrick Quigley <pquigley@clublespri.com>
To: 'Warren Bisbee' <repbis2@yahoo.com>
Cc: Tom Quigley <tomq@khco.com>; Jim Quigley <jgq@khco.com>
Sent: Wednesday, June 5, 2013 9:04 AM
Subject: kahana sunset

Warren, I received a notificiation in the mail from chris harts office on maui that there is a community informational meeting for the kahana sunset environmental assessment - for shoreline and site improvements for the sea wall repairs.to beheld on july 16th at the Keonenui Room at KS. I received this notice because I own the house across the st. from kahana sunset still and this is a mailer to "Neighboring Property Owners".

It appears that the ks is applying to the county for permits for shoreline improvements and this meeting is about taking input from neighbors.
It discusses the removal of existing failing seawall and replacement with a structurally engineered retaining wall 10 feet mauaka or mountainside of the existing seawall. It also discusses replacing 300 feet of existing 36 inch stormwater drain line that discharges into the ocean fronting kahana sunset. And finally it discusses a neighborhood beach access path that will be provided on kahana sunset property along its southern boundary from lower road to the ocean.
The proposed path will be constructed with compacted gravel and will be gated at both ends.

Here are my questions:
1. who is attending this meeting from kahana sunset? Who from the county is hosting the meeting?
2. is this in reference to the wall that is falling down into the ocean on the north end of our beach adjacent to the stormdrain?
- hopefully this is true because that area looks so awful. So I assume this area will be cleared out and a new wall built 10 feet closer to the mountain. Yes this will give us more beach.
- I am not sure anyone knows this but the old swimming pool that used to be in the middle of the courtyard between lower B building and F building was simply filled in and may be in the direct path of the proposed seawall construction. I assume this is concrete.
3. who pays for the replacement of the storm drain ? why does 300 ft of this need to be replaced?
4. who pays for the beach access - this is between KS and the schweitzers property. Will it be fenced along the way? If on ks property it will be running along the south end of F building and how will that intersect with the
Beach area that may be 5 feet below grade at this point? How is the kahana sunset handling liability insurance along this pathway? Now there will be 2

gates, one at the top, one at the bottom.
I assume they wont be locked? Whats the purpose of the gates if they cannot be locked? How will this impact the use of the kahana sunset chairs on the beach.
Will there be need for additional security at KS - what about use of outdoor showers, etc.. Has anyone contacted the Schweitzers to see how they feel about the location of the beach access?

I think it will be great to get the wall fixed. Do you expect an assessment? The beach access has always been an issue - is it accessible now? Are we giving the county a permanent easement to use our property?

Thanks for your info Warren, you always seem to have access to everything.

Patrick Quigley
Club Lespri
435-645-9696 ph
1765 Sidewinder Drive
Park City, Utah
84098
http://www.clublespri.com/
http://www.lespriresorts.com/

SIGN IN PLEASE

Kahana Sunset Community Informational Meeting

Tuesday, July 16, 2013

	NAME	ADDRESS
1	Glenn Kamaka	Lahaina
2	John Rogers	1161 Young St. Honolulu 96814
3	Clay Stuff	4630 L Honoapiilani Hwy
4	Steve Moses	120 Hui F Rd Lahaina
5	Janet Bacon	Lahaina
6		
7		
8		
9		
10		

Photos of Community Informational Meeting held at Kahana Sunset on July 16, 2013.

Kahana Sunset Neighborhood Meeting

Agenda

- Welcome
- Sign In
- Presentation
- Questions
- Site View
- Refreshments

The Background

- **Kahana Sunset (KS) located in Special Management Area (SMA)**
  - Close proximity to the shoreline
  - SMA's fall under an expanded set of reviews, requirements and design considerations
  - SMA work is extensively scrutinized by County of Maui, State of Hawai'i & Federal
  - SMA requires KS develop Environmental Action Document (EA)
- **Kahana Sunset has five major work projects that fall under SMA approval process**
  - Seawall, Courtyard, Drainage, 2 Previous Projects, Neighborhood Access Path
  - KS consolidates duplicated project requirements into one EA document
- **Kahana Sunset provides Neighborhood Access Path**
  - Beach access currently gained exclusively through KS property
  - KS requests allowance to install a dedicated neighborhood access path
  - KS installs path at its own expense
- **County of Maui requests Kahana Sunset change Zoning**
  - 1972 residential zoning designation no longer appropriate
  - KS choses zoning designation that matches current property use and taxation rate
  - KS agrees to limit structural height to current building height

Map Overview of Property

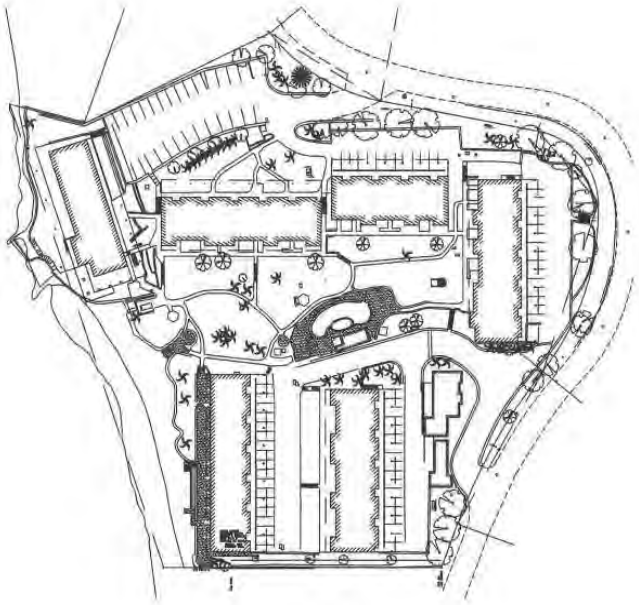

Aerial View of Area

The Projects

- **Project - Replace the Courtyard Seawall**
  - Seawall was damaged in 2010
  - Requests replacement with correctly engineered seawall
  - Moves seawall inland, adds more useable beach area to the beachfront

- **Project - Upgrade Courtyard after Seawall Replacement**
  - New seawall location reduces courtyard
  - Request to widen the courtyard to provide more area
  - Replaces non native floral species with native varieties

- **Project - Evaluate, Replace and Upgrade Lower Drainage System**
  - Large upcountry area, Lower Honoapiilani Road and on-site all drain into KS
  - 40+ year old drainage line system
  - Requests replacement of deteriorated line with engineered drain line
  - KS adds onsite filtration to improve water quality entering bay

The Projects

- **Project - Finalize the Emergency Permits previously issued**
  - 2 Emergency permits issued , 2009 and 2010
  - Repairs have been completed successfully under county scrutiny
  - Request permits be fully and finally approved
  - Request includes all documentation required under the SMA

- **Project - Add Neighborhood Access Path**
  - Currently no public access provided to beach
  - KS requests installation of dedicated neighborhood access path
  - Path to be installed at KS expense

- **Request - Address Zoning change requested by the county**
  - KS zoned Residential (R3) in 1972
  - County requests KS apply for a new appropriate zoning designation
  - KS researches, requests a zoning designation of H-M (Hotel – up to 6 stories)
  - KS stipulates any new or replacement structures to be built no higher than current building height
  - Any new or replacements structures fall under new SMA process review

The Approval Process

- **Develop a Environmental Assessment Document(EA) in Support of Master Plan**
  - Master Plan developed under prescribed governmental guidelines
  - Includes all the requirements of the County of Maui
  - Includes any State of Hawai'i or Federal requirements
  - Submitted for county, state and federal review and approval
- **The EA includes**
  - Property Surveys
  - Shoreline Survey
  - Cultural Survey
  - Archeological Monitoring Plan
  - Bay Wave Climate Study by Coastal Engineer
  - Seawall Design by a Structural Engineer
  - Evaluation of all Drainages entering property by Civil Engineer
  - Drainage Design by an appropriate Civil Engineer
  - Design of Neighborhood Access by an appropriate Structural Engineer
  - Design of Courtyard by Landscape Architect
  - Selection of Zoning by a Land Planner in concert with County review

The Approval Process

- **Process**
  - Preliminary review of the Draft Environmental Assessment Document by County, State and Federal Agencies
  - Preliminary review of Environmental Assessment Document by Maui County Planning Commission
  - Neighborhood Discussion and Review of the proposed projects
  - Maui Planning Commission review of the final Environmental Assessment
  - Public Hearing before Maui County Planning Commission for SMA approval
  - Review Change in Zoning by Land Use Committee of the Maui County Council
  - Review of Change in Zoning by the full Maui County Council for approval
- **Permitting**
  - Building Permits
  - Electrical Permits
  - Grading Permit
  - Shoreline Variance Permits
  - State Easement
  - Right of Entry for Beach

The Work

- **2013**
  - EA Accepted
  - Permits Approved
  - Bids gathered for seawall, drain line and courtyard work
- **2014**
  - Beach seawall constructed & drain lines replaced
- **2015**
  - B & C Building Banks Reconfigured, Retaining Walls added
  - Lower Courtyard Re-Landscaped
- **2016**
  - Neighborhood Access Path Constructed

The Property Plan

The Access Path Plan

Mahalo

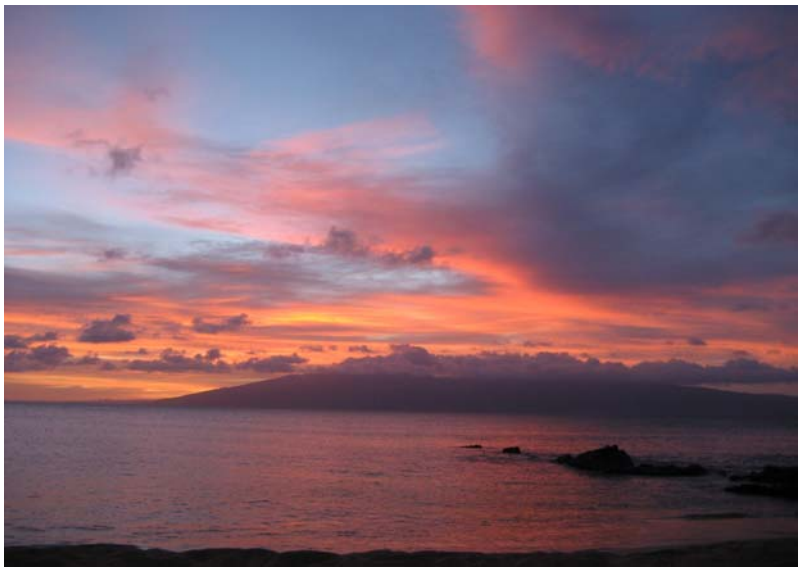

APPENDIX O

Marc M. Siah & Associates July 29, 2013 Letter

RE: Stormwater Origins & Volume and Seawall Configuration

Consulting Engineers

Marc M. Siah & Associates, Inc.

Engineering & Science of the Environment

July 29, 2013

Chris Hart and Partners, Inc.

115 N. Market Street

Wailuku, Maui, Hawaii 96793

Attention: Mr. Raymond Cabebe, LEAD, AP BD+C

RE: Kahana Sunset Shoreline and Site Improvements

Dear Mr. Cabebe:

In response to your e-mail of July 16, 2013, we are offering the following responses to the questions from Maui Department of Planning.

Item No. 2: The origin and amounts of storm water entering the bay through the existing outfall:

Historically the Keonenui Bay, has been the natural terminus for all overland storm flows. Subsequent to development of Kahana Sunset and upland areas of the watershed into residential subdivisions, drainage infrastructures were devised to handle and manage the overland storm flow into the bay. An existing 36-inch outfall serves to deliver the overland flow into the Keonenui Bay. This outfall not only conveys all on-site storm runoff from Kahana Sunset, it also delivers storm runoff from Napili Villas development as well as 72-acres of land mauka of The Honoapiilani Highway and the Napilihau Road. A third component of storm water contribution to the Kahana Sunset drainage system is the surface runoff generated on a portion of the Lower Honoapiilani Road right-of way along the eastern boundary of the property. In other words, the total potential storm flow conveyed by the existing outfall into the bay consists of: a) on-site generated runoff on Kahana sunset property; b) the overflow from Napili Villas and upland areas; and c) the

overland surface flow generated on portions of the roadway right-of-way along the eastern boundary of the development. As detailed in the Preliminary Drainage Report for Kahana Sunset, the total on-site storm runoff generated on the Kahana Sunset development is calculated at 11.53 cfs.

The storm water infrastructure in Napili Villas is designed to include two detention/retention basins which serve as the backbone to the system with the capacity to contain and hold storm runoff volumes generated on the entire development during a 10-year storm event. During severe storm events, overflow form theses retention/detention basins are diverted via a spillway and a 24-inch storm drain/culvert which traverses the Lower Honoapiilani Road and conveys the flow into a drywell/intake structure on the Kahana Sunset property which ultimately flows into the bay via the 36-inch outfall. The total contribution of storm runoff released from the Napili Villas and the upland areas mauka of The Honoapiilani Highway and the Napilihau Road is quantified in the Napili Villas Preliminary Engineering Report to be 44 cfs.

The overland runoff generated on a portion of the Lower Honoapiilani Road right-of-way between baseline Road Stations 143+00 and 155+00 along the eastern border of the Kahana Sunset development and flows into the Kahana Sunset drainage system is estimated at 9.12 cfs.

In summary, the total storm flow into the Keonenui Bay via the existing 36-inch outfall is the sum of the above mentioned flows which is estimated at 64.65 cfs, eighty two percent of

which is attributed to off-site generated storm flows and only 18 percent of which is the flow generated on the grounds of Kahana Sunset development.

Item No. 3: Analysis of alternative design configuration for the Seawall at Kahana Sunset

Before analyzing different configurations for the seawall and the corresponding effects on erosion and beach stability, it is important to summarily present the findings of a wave climate study prepared for Kahana Sunset Development in 2011. The findings were used as the basis for design configuration for the new wall and beach access stairs. In order to address the chronic beach erosion at Kahana Sunset condominium located on northwest Maui, the AOAO initiated a wave climate study to evaluate wave transformation process for swells and wind generated waves, as they approach the area and impinge upon the coastline. The area is subject to north swells and trade wind waves which undergo significant transformation due to shallow shelves, headlands, and the fringing reefs. The coastline fronting the property historically experiences problems associated with chronic erosion of the beach and wave over wash of existing sea wall foundations and other coastal fortifications along the coastline.

The study utilizes 10-years of hind cast data presented in the Wave Energy Resources along the Hawaiian Island Chain by Stopa et al. (2011b) and a finite-difference Boussineq computer model to simulate swell and wind wave transformation as they enter the embayment and approach Kahana Sunset coastline. The region is primarily subject to the north swells and northeast wind waves and experience little effect from the south swells. The large oblique incident angles as well as the shallow near shore reef system, greatly reduce the height of the wind waves as they approach the Kahana Sunset. The study,

therefore, simulates transformation of two different wave climates, namely, a peak swell event and a moderate swell event, respectively, for assessment of their impacts on Kahana Sunset beach. The peak swell event has a significant wave height of 12 feet and represents a major swell which may occur once in ten years or so. The moderate swell represents a 6-feet wave with smaller period which occurs frequently in early and late season and may produce hazardous conditions at the site.

Simulation results for a peak swell event indicate that transformed wave heights in the embayment range between 1.5 to 3 feet despite having a much larger value over the reef. Although the wave setup is less than 0.18 feet, the surge may overtop the beach with floodwater inundating approximately 60 feet inland reaching the existing seawalls and other infrastructures. This inundation is the major reason for undermining and erosion of footings of walls and other coastal fortifications on the property.

The oblique wave incidence at the shore creates a clockwise mean flow in the embayment. The net long shore current along the beach fronting the Kahana Sunset reaches 1.98 ft/s. This net long shore current is the culprit and the main mechanism for erosion of the beach during peak swell event. Since the southern part of the embayment is steep, the sand eroded from the beach is transported and deposited in the reef channels in the embayment.

The simulation results for the waves from a moderate swell event with smaller wave height and shorter periods, confirm that these waves, in contrast to peak swell, follow the channels in the reef system and are refracted to a greater extent closer to the coast and

approach the shore almost normally. The moderate event creates a maximum wave set up of 0.12 ft along the shore, and causes inundation up to of 42 feet inland. While such events might not present a beach erosion hazard, the surge reaching the seawall, however, may cause erosion and undermining of the footings of the structures over time. The moderate swell generates a maximum net current of 1.56 ft/s along the shore, but the flow pattern is not well defined and unlikely to cause a net transport of sand in the offshore direction.

A very general analysis of concave vs. convex shoreline configuration on distribution of wave energy, wave setup, and development of long shore currents assuming a gentle shallow water and beach bathymetry, can be summarized as follows. Assuming parallel contour lines and gentle sloping of near shore, a concave coastal configuration, allows divergence of wave orthogonals upon shoaling, diffraction and refraction processes, as waves approach the coastline, causing an even distribution of wave energy across the length of the shoreline. This in turn leads to less differential setup and minimal long-shore currents along the beach with no to minor erosion potential. Such configuration allows development of the most stable and natural beaches and coastlines as evidenced in actual settings in embayments and shorelines. In contrast, a convex configuration will cause the wave orthogonals, as they approach the shoreline, to converge towards the apex of the convex shoreline and diverge on the flanking sides of the apex (as evidenced in natural settings around headlands). The divergence of the orthogonals leads to development of differential setup between the apex and the flanking sides causing long shore currents along the beach which results in littoral drift and beach erosion.

Mr. Raymond Cabebe
Chris Hart and Partners, Inc.
Kahana Sunset Shoreline and Site Improvements

July 29, 2013
Page 6

Based on the findings of the wave climate study and the general shoreline configuration analysis, the new modifications for the seawall and beach access stairs were designed to be located well beyond the inundation distances identified in the study and in a generally speaking concave configuration, albeit, with stretches of straight wall and/or stair segments to allow easier construction.

I hope that the above explanation addresses the question raised by Maui Department of Planning. Should you have any questions or need additional clarification please call me at 538-7180.

Sincerely,
Marc M. Siah & Associates, Inc.

Marc M. Siah, Ph.D., P.E., BCEE
President